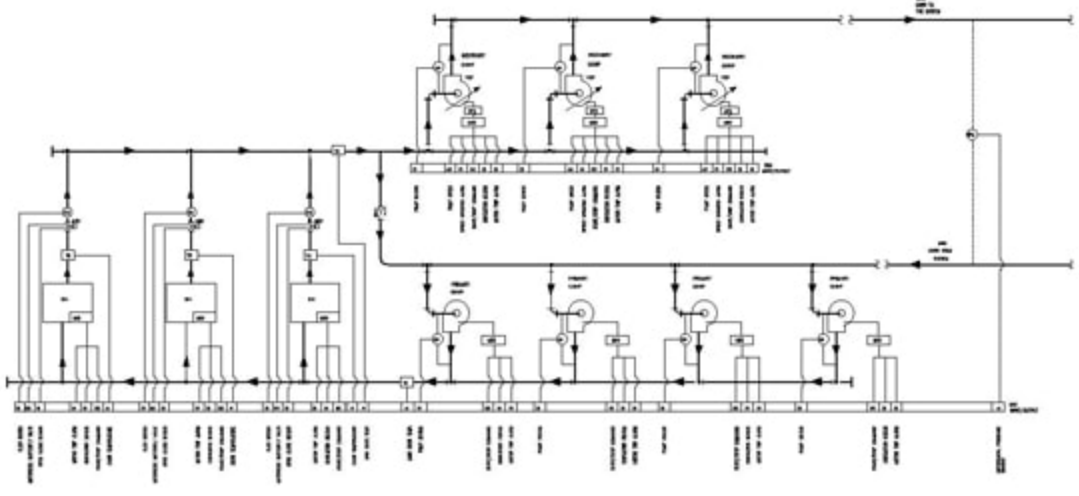

CHILLERS AND CHILLED WATER PUMPS CONTROL DIAGRAM