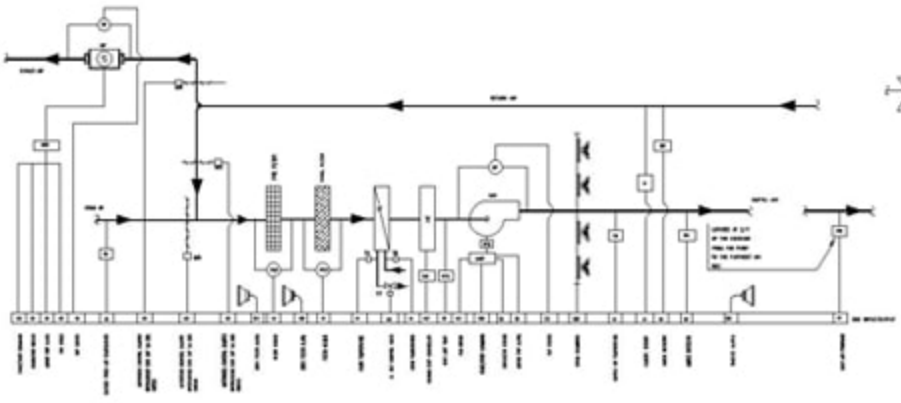

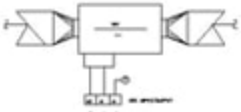

VARIABLE AIR VOLUME BOX (VAV)

[illegible]	[illegible]
[illegible]	[illegible]
[illegible]	[illegible]