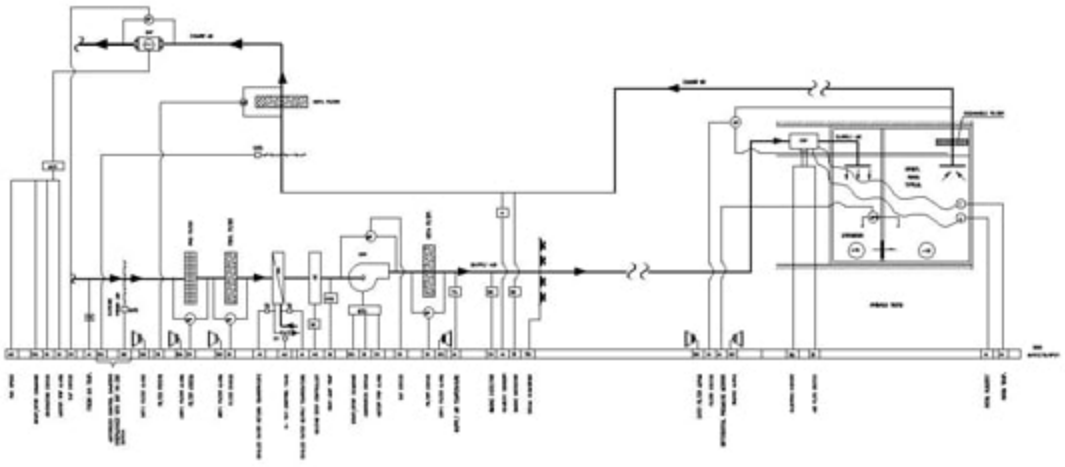

TYPICAL AHU CONTROL DIAGRAM
(CAV) SYSTEM (TAH-2)
100% FRESH AIR (AHU2-1)

A	SINGLE DUCT
B	DUAL DUCT
C	DUAL DUCT
D	DUAL DUCT
E	DUAL DUCT
F	DUAL DUCT
G	DUAL DUCT
H	DUAL DUCT
I	DUAL DUCT
J	DUAL DUCT
K	DUAL DUCT
L	DUAL DUCT
M	DUAL DUCT
N	DUAL DUCT
O	DUAL DUCT
P	DUCT SENSOR
Q	OUTDOOR TEMP. SENSOR
R	OUTDOOR TEMP. SENSOR
S	DUAL DUCT
T	DUAL DUCT
U	DUAL DUCT
V	DUAL DUCT
W	DUAL DUCT
X	DUAL DUCT
Y	DUAL DUCT
Z	DUAL DUCT
AA	DUAL DUCT
AB	DUAL DUCT
AC	DUAL DUCT
AD	DUCT SENSOR
AE	DUAL DUCT
AF	DUAL DUCT
AG	DUAL DUCT
AH	DUAL DUCT
AI	DUAL DUCT
AJ	DUAL DUCT
AK	DUAL DUCT
AL	DUAL DUCT
AM	DUAL DUCT
AN	DUAL DUCT
AO	DUAL DUCT
AP	DUAL DUCT
AQ	DUAL DUCT
AR	DUAL DUCT
AS	DUAL DUCT
AT	DUAL DUCT
AU	DUAL DUCT
AV	DUAL DUCT
AW	DUAL DUCT
AX	DUAL DUCT
AY	DUAL DUCT
AZ	DUAL DUCT
BA	DUAL DUCT
BB	DUAL DUCT
BC	DUAL DUCT
BD	DUAL DUCT
BE	DUAL DUCT
BF	DUAL DUCT
BG	DUAL DUCT
BH	DUAL DUCT
BI	DUAL DUCT
BJ	DUAL DUCT
BK	DUAL DUCT
BL	DUAL DUCT
BM	DUAL DUCT
BN	DUAL DUCT
BO	DUAL DUCT
BP	DUAL DUCT
BQ	DUAL DUCT
BR	DUAL DUCT
BS	DUAL DUCT
BT	DUAL DUCT
BU	DUAL DUCT
BV	DUAL DUCT
BW	DUAL DUCT
BX	DUAL DUCT
BY	DUAL DUCT
BZ	DUAL DUCT
CA	DUAL DUCT
CB	DUAL DUCT
CC	DUAL DUCT
CD	DUAL DUCT
CE	DUAL DUCT
CF	DUAL DUCT
CG	DUAL DUCT
CH	DUAL DUCT
CI	DUAL DUCT
CJ	DUAL DUCT
CK	DUAL DUCT
CL	DUAL DUCT
CM	DUAL DUCT
CN	DUAL DUCT
CO	DUAL DUCT
CP	DUAL DUCT
CQ	DUAL DUCT
CR	DUAL DUCT
CS	DUAL DUCT
CT	DUAL DUCT
CU	DUAL DUCT
CV	DUAL DUCT
CW	DUAL DUCT
CX	DUAL DUCT
CY	DUAL DUCT
CZ	DUAL DUCT
DA	DUAL DUCT
DB	DUAL DUCT
DC	DUAL DUCT
DD	DUAL DUCT
DE	DUAL DUCT
DF	DUAL DUCT
DG	DUAL DUCT
DH	DUAL DUCT
DI	DUAL DUCT
DJ	DUAL DUCT
DK	DUAL DUCT
DL	DUAL DUCT
DM	DUAL DUCT
DN	DUAL DUCT
DO	DUAL DUCT
DP	DUAL DUCT
DQ	DUAL DUCT
DR	DUAL DUCT
DS	DUAL DUCT
DT	DUAL DUCT
DU	DUAL DUCT
DV	DUAL DUCT
DW	DUAL DUCT
DX	DUAL DUCT
DY	DUAL DUCT
DZ	DUAL DUCT
EA	DUAL DUCT
EB	DUAL DUCT
EC	DUAL DUCT
ED	DUAL DUCT
EE	DUAL DUCT
EF	DUAL DUCT
EG	DUAL DUCT
EH	DUAL DUCT
EI	DUAL DUCT
EJ	DUAL DUCT
EK	DUAL DUCT
EL	DUAL DUCT
EM	DUAL DUCT
EN	DUAL DUCT
EO	DUAL DUCT
EP	DUAL DUCT
EQ	DUAL DUCT
ER	DUAL DUCT
ES	DUAL DUCT
ET	DUAL DUCT
EU	DUAL DUCT
EV	DUAL DUCT
EW	DUAL DUCT
EX	DUAL DUCT
EY	DUAL DUCT
EZ	DUAL DUCT
FA	DUAL DUCT
FB	DUAL DUCT
FC	DUAL DUCT
FD	DUAL DUCT
FE	DUAL DUCT
FF	DUAL DUCT
FG	DUAL DUCT
FH	DUAL DUCT
FI	DUAL DUCT
FJ	DUAL DUCT
FK	DUAL DUCT
FL	DUAL DUCT
FM	DUAL DUCT
FN	DUAL DUCT
FO	DUAL DUCT
FP	DUAL DUCT
FQ	DUAL DUCT
FR	DUAL DUCT
FS	DUAL DUCT
FT	DUAL DUCT
FU	DUAL DUCT
FV	DUAL DUCT
FW	DUAL DUCT
FX	DUAL DUCT
FY	DUAL DUCT
FZ	DUAL DUCT
GA	DUAL DUCT
GB	DUAL DUCT
GC	DUAL DUCT
GD	DUAL DUCT
GE	DUAL DUCT
GF	DUAL DUCT
GG	DUAL DUCT
GH	DUAL DUCT
GI	DUAL DUCT
GJ	DUAL DUCT
GK	DUAL DUCT
GL	DUAL DUCT
GM	DUAL DUCT
GN	DUAL DUCT
GO	DUAL DUCT
GP	DUAL DUCT
GQ	DUAL DUCT
GR	DUAL DUCT
GS	DUAL DUCT
GT	DUAL DUCT
GU	DUAL DUCT
GV	DUAL DUCT
GW	DUAL DUCT
GX	DUAL DUCT
GY	DUAL DUCT
GZ	DUAL DUCT
HA	DUAL DUCT
HB	DUAL DUCT
HC	DUAL DUCT
HD	DUAL DUCT
HE	DUAL DUCT
HF	DUAL DUCT
HG	DUAL DUCT
HH	DUAL DUCT
HI	DUAL DUCT
HJ	DUAL DUCT
HK	DUAL DUCT
HL	DUAL DUCT
HM	DUAL DUCT
HN	DUAL DUCT
HO	DUAL DUCT
HP	DUAL DUCT
HQ	DUAL DUCT
HR	DUAL DUCT
HS	DUAL DUCT
HT	DUAL DUCT
HU	DUAL DUCT
HV	DUAL DUCT
HW	DUAL DUCT
HX	DUAL DUCT
HY	DUAL DUCT
HZ	DUAL DUCT
IA	DUAL DUCT
IB	DUAL DUCT
IC	DUAL DUCT
ID	DUAL DUCT
IE	DUAL DUCT
IF	DUAL DUCT
IG	DUAL DUCT
IH	DUAL DUCT
II	DUAL DUCT
IJ	DUAL DUCT
IK	DUAL DUCT
IL	DUAL DUCT
IM	DUAL DUCT
IN	DUAL DUCT
IO	DUAL DUCT
IP	DUAL DUCT
IQ	DUAL DUCT
IR	DUAL DUCT
IS	DUAL DUCT
IT	DUAL DUCT
IU	DUAL DUCT
IV	DUAL DUCT
IW	DUAL DUCT
IX	DUAL DUCT
IY	DUAL DUCT
IZ	DUAL DUCT
JA	DUAL DUCT
JB	DUAL DUCT
JC	DUAL DUCT
JD	DUAL DUCT
JE	DUAL DUCT
JF	DUAL DUCT
JG	DUAL DUCT
JH	DUAL DUCT
JI	DUAL DUCT
JJ	DUAL DUCT
JK	DUAL DUCT
JL	DUAL DUCT
JM	DUAL DUCT
JN	DUAL DUCT
JO	DUAL DUCT
JP	DUAL DUCT
JQ	DUAL DUCT
JR	DUAL DUCT
JS	DUAL DUCT
JT	DUAL DUCT
JU	DUAL DUCT
JV	DUAL DUCT
JW	DUAL DUCT
JX	DUAL DUCT
JY	DUAL DUCT
JZ	DUAL DUCT
KA	DUAL DUCT
KB	DUAL DUCT
KC	DUAL DUCT
KD	DUAL DUCT
KE	DUAL DUCT
KF	DUAL DUCT
KG	DUAL DUCT
KH	DUAL DUCT
KI	DUAL DUCT
KJ	DUAL DUCT
KK	DUAL DUCT
KL	DUAL DUCT
KM	DUAL DUCT
KN	DUAL DUCT
KO	DUAL DUCT
KP	DUAL DUCT
KQ	DUAL DUCT
KR	DUAL DUCT
KS	DUAL DUCT
KT	DUAL DUCT
KU	DUAL DUCT
KV	DUAL DUCT
KW	DUAL DUCT
KX	DUAL DUCT
KY	DUAL DUCT
KZ	DUAL DUCT
LA	DUAL DUCT
LB	DUAL DUCT
LC	DUAL DUCT
LD	DUAL DUCT
LE	DUAL DUCT
LF	DUAL DUCT
LG	DUAL DUCT
LH	DUAL DUCT
LI	DUAL DUCT
LJ	DUAL DUCT
LK	DUAL DUCT
LL	DUAL DUCT
LM	DUAL DUCT
LN	DUAL DUCT
LO	DUAL DUCT
LP	DUAL DUCT
LQ	DUAL DUCT
LR	DUAL DUCT
LS	DUAL DUCT
LT	DUAL DUCT
LU	DUAL DUCT
LV	DUAL DUCT
LW	DUAL DUCT
LX	DUAL DUCT
LY	DUAL DUCT
LZ	DUAL DUCT
MA	DUAL DUCT
MB	DUAL DUCT
MC	DUAL DUCT
MD	DUAL DUCT
ME	DUAL DUCT
MF	DUAL DUCT
MG	DUAL DUCT
MH	DUAL DUCT
MI	DUAL DUCT
MJ	DUAL DUCT
MK	DUAL DUCT
ML	DUAL DUCT
MM	DUAL DUCT
MN	DUAL DUCT
MO	DUAL DUCT
MP	DUAL DUCT
MQ	DUAL DUCT
MR	DUAL DUCT
MS	DUAL DUCT
MT	DUAL DUCT
MU	DUAL DUCT
MV	DUAL DUCT
MW	DUAL DUCT
MX	DUAL DUCT
MY	DUAL DUCT
MZ	DUAL DUCT
NA	DUAL DUCT
NB	DUAL DUCT
NC	DUAL DUCT
ND	DUAL DUCT
NE	DUAL DUCT
NF	DUAL DUCT
NG	DUAL DUCT
NH	DUAL DUCT
NI	DUAL DUCT
NJ	DUAL DUCT
NK	DUAL DUCT
NL	DUAL DUCT
NM	DUAL DUCT
NN	DUAL DUCT
NO	DUAL DUCT
NP	DUAL DUCT
NQ	DUAL DUCT
NR	DUAL DUCT
NS	DUAL DUCT
NT	DUAL DUCT
NU	DUAL DUCT
NV	DUAL DUCT
NW	DUAL DUCT
NX	DUAL DUCT
NY	DUAL DUCT
NZ	DUAL DUCT
OA	DUAL DUCT
OB	DUAL DUCT
OC	DUAL DUCT
OD	DUAL DUCT
OE	DUAL DUCT
OF	DUAL DUCT
OG	DUAL DUCT
OH	DUAL DUCT
OI	DUAL DUCT
OJ	DUAL DUCT
OK	DUAL DUCT
OL	DUAL DUCT
OM	DUAL DUCT
ON	DUAL DUCT
OO	DUAL DUCT
OP	DUAL DUCT
OQ	DUAL DUCT
OR	DUAL DUCT
OS	DUAL DUCT
OT	DUAL DUCT
OU	DUAL DUCT
OV	DUAL DUCT
OW	DUAL DUCT
OX	DUAL DUCT
OY	DUAL DUCT
OZ	DUAL DUCT
PA	DUAL DUCT
PB	DUAL DUCT
PC	DUAL DUCT
PD	DUAL DUCT
PE	DUAL DUCT
PF	DUAL DUCT
PG	DUAL DUCT
PH	DUAL DUCT
PI	DUAL DUCT
PJ	DUAL DUCT
PK	DUAL DUCT
PL	DUAL DUCT
PM	DUAL DUCT
PN	DUAL DUCT
PO	DUAL DUCT
PP	DUAL DUCT
PQ	DUAL DUCT
PR	DUAL DUCT
PS	DUAL DUCT
PT	DUAL DUCT
PU	DUAL DUCT
PV	DUAL DUCT
PW	DUAL DUCT
PX	DUAL DUCT
PY	DUAL DUCT
PZ	DUAL DUCT
QA	DUAL DUCT
QB	DUAL DUCT
QC	DUAL DUCT
QD	DUAL DUCT
QE	DUAL DUCT
QF	DUAL DUCT
QG	DUAL DUCT
QH	DUAL DUCT
QI	DUAL DUCT
QJ	DUAL DUCT
QK	DUAL DUCT
QL	DUAL DUCT
QM	DUAL DUCT
QN	DUAL DUCT
QO	DUAL DUCT
QP	DUAL DUCT
QQ	DUAL DUCT
QR	DUAL DUCT
QS	DUAL DUCT
QT	DUAL DUCT
QU	DUAL DUCT
QV	DUAL DUCT
QW	DUAL DUCT
QX	DUAL DUCT
QY	DUAL DUCT
QZ	DUAL DUCT
RA	DUAL DUCT
RB	DUAL DUCT
RC	DUAL DUCT
RD	DUAL DUCT
RE	DUAL DUCT
RF	DUAL DUCT
RG	DUAL DUCT
RH	DUAL DUCT
RI	DUAL DUCT
RJ	DUAL DUCT
RK	DUAL DUCT
RL	DUAL DUCT
RM	DUAL DUCT
RN	DUAL DUCT
RO	DUAL DUCT
RP	DUAL DUCT
RQ	DUAL DUCT
RR	DUAL DUCT
RS	DUAL DUCT
RT	DUAL DUCT
RU	DUAL DUCT
RV	DUAL DUCT
RW	DUAL DUCT
RX	DUAL DUCT
RY	DUAL DUCT
RZ	DUAL DUCT
SA	DUAL DUCT
SB	DUAL DUCT
SC	DUAL DUCT
SD	DUAL DUCT
SE	DUAL DUCT
SF	DUAL DUCT
SG	DUAL DUCT
SH	DUAL DUCT
SI	DUAL DUCT
SJ	DUAL DUCT
SK	DUAL DUCT
SL	DUAL DUCT
SM	DUAL DUCT
SN	DUAL DUCT
SO	DUAL DUCT
SP	DUAL DUCT
SQ	DUAL DUCT
SR	DUAL DUCT
SS	DUAL DUCT
ST	DUAL DUCT
SU	DUAL DUCT
SV	DUAL DUCT
SW	DUAL DUCT
SX	DUAL DUCT
SY	DUAL DUCT
SZ	DUAL DUCT
TA	DUAL DUCT
TB	DUAL DUCT
TC	DUAL DUCT
TD	DUAL DUCT
TE	DUAL DUCT
TF	DUAL DUCT
TG	DUAL DUCT
TH	DUAL DUCT
TI	DUAL DUCT
TJ	DUAL DUCT
TK	DUAL DUCT
TL	DUAL DUCT
TM	DUAL DUCT
TN	DUAL DUCT
TO	DUAL DUCT
TP	DUAL DUCT
TQ	DUAL DUCT
TR	DUAL DUCT
TS	DUAL DUCT
TT	DUAL DUCT
TU	DUAL DUCT
TV	DUAL DUCT
TW	DUAL DUCT
TX	DUAL DUCT
TY	DUAL DUCT
TZ	DUAL DUCT
UA	DUAL DUCT
UB	DUAL DUCT
UC	DUAL DUCT
UD	DUAL DUCT
UE	DUAL DUCT
UF	DUAL DUCT
UG	DUAL DUCT
UH	DUAL DUCT
UI	DUAL DUCT
UJ	DUAL DUCT
UK	DUAL DUCT
UL	DUAL DUCT
UM	DUAL DUCT
UN	DUAL DUCT
UO	DUAL DUCT
UP	DUAL DUCT
UQ	DUAL DUCT
UR	DUAL DUCT
US	DUAL DUCT
UT	DUAL DUCT
UU	DUAL DUCT
UV	DUAL DUCT
UW	DUAL DUCT
UX	DUAL DUCT
UY	DUAL DUCT
UZ	DUAL DUCT
VA	DUAL DUCT
VB	DUAL DUCT
VC	DUAL DUCT
VD	DUAL DUCT
VE	DUAL DUCT
VF	DUAL DUCT
VG	DUAL DUCT
VH	DUAL DUCT
VI	DUAL DUCT
VJ	DUAL DUCT
VK	DUAL DUCT
VL	DUAL DUCT
VM	DUAL DUCT
VN	DUAL DUCT
VO	DUAL DUCT
VP	DUAL DUCT
VQ	DUAL DUCT
VR	DUAL DUCT
VS	DUAL DUCT
VT	DUAL DUCT
VU	DUAL DUCT
VV	DUAL DUCT
VW	DUAL DUCT
VX	DUAL DUCT
VY	DUAL DUCT
VZ	DUAL DUCT
WA	DUAL DUCT
WB	DUAL DUCT
WC	DUAL DUCT
WD	DUAL DUCT
WE	DUAL DUCT
WF	DUAL DUCT
WG	DUAL DUCT
WH	DUAL DUCT
WI	DUAL DUCT
WJ	DUAL DUCT
WK	DUAL DUCT
WL	DUAL DUCT
WM	DUAL DUCT
WN	DUAL DUCT
WO	DUAL DUCT
WP	DUAL DUCT
WQ	DUAL DUCT
WR	DUAL DUCT
WS	DUAL DUCT
WT	DUAL DUCT
WU	DUAL DUCT
WV	DUAL DUCT
WW	DUAL DUCT
WX	DUAL DUCT
WY	DUAL DUCT
WZ	DUAL DUCT
XA	DUAL DUCT
XB	DUAL DUCT
XC	DUAL DUCT
XD	DUAL DUCT
XE	DUAL DUCT
XF	DUAL DUCT
XG	DUAL DUCT
XH	DUAL DUCT
XI	DUAL DUCT
XJ	DUAL DUCT
XK	DUAL DUCT
XL	DUAL DUCT
XM	DUAL DUCT
XN	DUAL DUCT
XO	DUAL DUCT
XP	DUAL DUCT
XQ	DUAL DUCT
XR	DUAL DUCT
XS	DUAL DUCT
XT	DUAL DUCT
XU	DUAL DUCT
XV	DUAL DUCT
XW	DUAL DUCT
XX	DUAL DUCT
XY	DUAL DUCT
XZ	DUAL DUCT
YA	DUAL DUCT
YB	DUAL DUCT
YC	DUAL DUCT
YD	DUAL DUCT
YE	DUAL DUCT
YF	DUAL DUCT
YG	DUAL DUCT
YH	DUAL DUCT
YI	DUAL DUCT
YJ	DUAL DUCT
YK	DUAL DUCT
YL	DUAL DUCT
YM	DUAL DUCT
YN	DUAL DUCT
YO	DUAL DUCT
YP	DUAL DUCT
YQ	DUAL DUCT
YR	DUAL DUCT
YS	DUAL DUCT
YT	DUAL DUCT
YU	DUAL DUCT
YV	DUAL DUCT
YW	DUAL DUCT
YX	DUAL DUCT
YY	DUAL DUCT
YZ	DUAL DUCT
ZA	DUAL DUCT
ZB	DUAL DUCT
ZC	DUAL DUCT
ZD	DUAL DUCT
ZE	DUAL DUCT
ZF	DUAL DUCT
ZG	DUAL DUCT
ZH	DUAL DUCT
ZI	DUAL DUCT
ZJ	DUAL DUCT
ZK	DUAL DUCT
ZL	DUAL DUCT
ZM	DUAL DUCT
ZN	DUAL DUCT
ZO	DUAL DUCT
ZP	DUAL DUCT
ZQ	DUAL DUCT
ZR	DUAL DUCT
ZS	DUAL DUCT
ZT	DUAL DUCT
ZU	DUAL DUCT
ZV	DUAL DUCT
ZW	DUAL DUCT
ZX	DUAL DUCT
ZY	DUAL DUCT
ZZ	DUAL DUCT