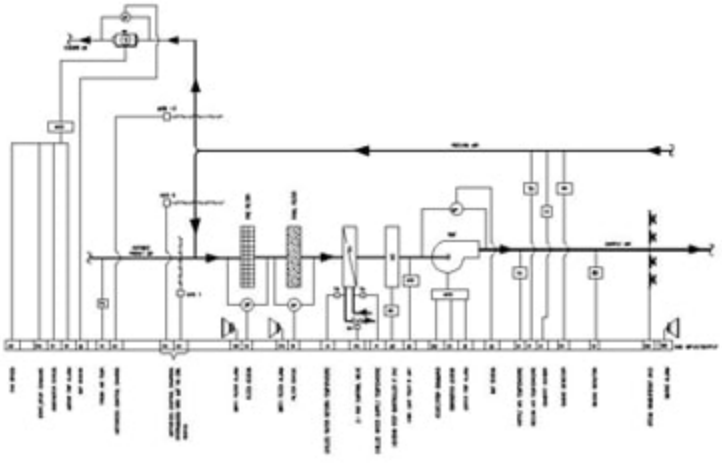

TYPICAL AHU CONTROL DIAGRAM
(CAV) SYSTEM (TYPE-6)
AHU-08 FOR MAGAZINE PREPARATION,
CENTRAL AND BODIES STORAGE

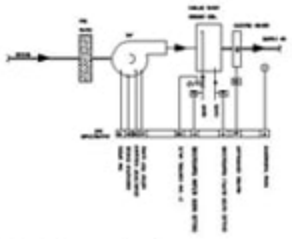

TYPICAL CHILLED WATER FAN
COIL UNIT CONTROL DIAGRAM

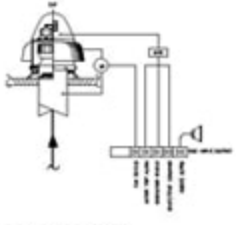

GENERAL EXHAUST AIR FAN (EAF)
FOR ROOF MOUNTED