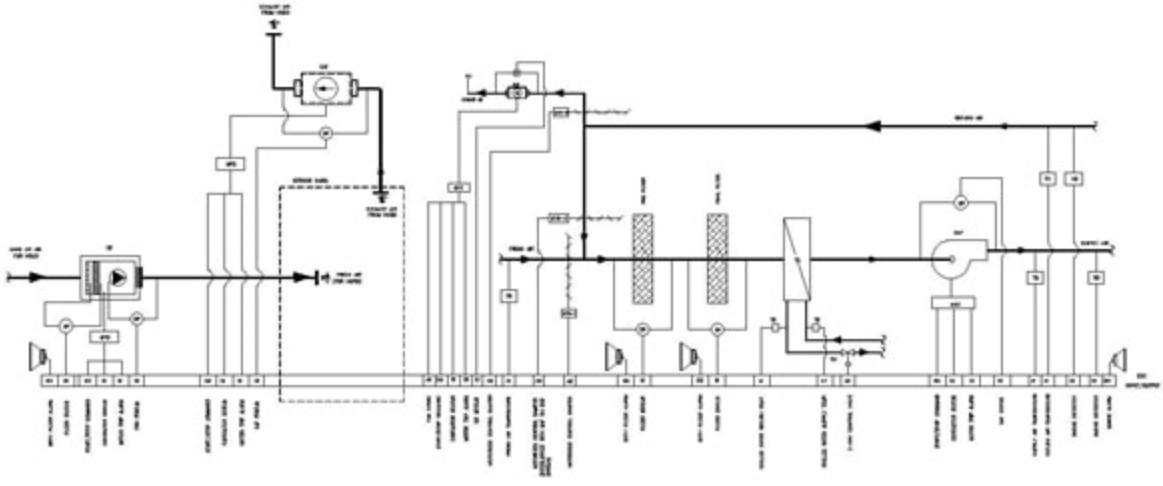

TYPICAL AHU CONTROL DIAGRAM
(CAV) SYSTEM (TYPE-7)
AHU-10 FOR KITCHEN

SEQUENCE OF OPERATION

1. STARTUP CONTROL

a) STARTUP OF AHU IS DISPATCHED BY A TIMED PROGRAM BEFORE OF THE ACC "ON-OFF-AUTO".

b) IN "OFF" POSITION THE AHU WILL REMAIN DISPATCHED.

c) IN "OFF" POSITION THE AHU WILL STOP.

d) IN "AUTO" MODE THE SWITCHING IS DISPATCHED BY THE SCHEDULE.

2. NORMAL AHU OPERATION

a) THE AHU WILL BE DISPATCHED BEFORE AHU STARTUP BY AT SCHEDULE.

b) WHEN THE [AHU] IS DISPATCHED, RETURN AIR, EXHAUST AIR AND OUTSIDE AIR DAMPERS [AHU, EFU, RFU] WILL REMAIN MOTORS FROM AIR THE AHU SUPPLY FAN [SAF] WILL START FROM COIL SWITCH CLOSURE OR ABOVE DAMPERS AND THE CONTROL SYSTEM WILL BE OPERATED.

c) STEAM HEAD EXHAUST AIR FAN [EAF] & STEAM HEAD FROM AIR FAN [RFU] WILL BE STARTED AUTOMATICALLY. ONE THE [AHU] SUPPLY FAN TO MAINTAIN THE DESIGNATED AREAS & CREATE PRESSURE RELATED TO THE ADJACENT AREAS.

d) TEMPERATURE SENSOR [TS] LOCATED IN THE AHU RETURN AIR DUCT MEASURES THE AVERAGE TEMPERATURE IN THE CONDITIONED AREAS AND WILL MAINTAIN A PRESET AVERAGE TEMPERATURE BY MODULATING THE TWO-WAY CONTROL VALVE [TV] IN BRANCH.

e) STEAM SENSOR [TS] LOCATED IN THE SUPPLY AIR DUCT WILL CONTROL THE EXHAUST AIR DAMPER [EAD], OUTSIDE AIR DAMPER & RETURN AIR DAMPER TO ALLOW SAME DEGREE FROM AIR STEAM FAILURE IN CASE OF THE SUPPLY AIR STEAM SENSOR TO THE PRE ADJUSTED-AUTOMATIC LOW ABOUT TEMP., THE RETURN AIR DAMPER [RFU, RFU] CLOSES & THE FRESH AIR DAMPER AND EXHAUST AIR DAMPER WILL FULLY OPEN AND THE EXHAUST PRESSURE WILL DEPENDS ON FAN SPEED.

f) WHEN THE [AHU] IS DISPATCHED, THE SUPPLY AIR FAN [SAF], EXHAUST AIR FAN [EAF] & AHEAD-OFF FRESH AIR DAMPER [EAD] WILL BE OPENED, OUTSIDE AIR DAMPER AND RETURN AIR DAMPER [EAD] WILL BE CLOSED.

3. THE AHU OPERATION

a) WHEN THERE IS DEMAND OF THE AHU WHICH DETECTED BY AT AHU DAMPER [DETECTOR [DS] INSTALLED IN STEAM THE AHU RETURN DUCT OR IN THE AHU SUPPLY DUCT, AN ALARM SIGNAL WILL BE SENT TO THE FIRE ALARM PANEL AND TO THE AHU TO SHUT DOWN SUPPLY AIR FAN [SAF] AND CLOSE THE DAMPERS OF OUTSIDE AIR [OA], [RA] & [EA] WILL FULLY OPEN THE EXHAUST AIR DAMPER [EAD] [EA].

b) THE DAMPER [EAD] [EA] [SAF] WILL OPERATE WITH THE AHU. THEY OPEN AND ARE INDICATED THE DAMPER LOCATED IN THE EXHAUST DUCT AND AIR DAMPER TO CONTROL THE DAMPER TO REPRESENT THE BUILDING.

c) WHEN FIRE ALARM IS RECEIVED TO THE DAMPER [EAD] & [EA] WILL OPERATE IN SUPPLIED LIFE FROM AIR [FLL] FUSIBLE AND EXHAUST DAMPER OR RETURN AIR AND AIR CONTROL DAMPER, DAMPER ON THE DAMPER LOCATED IN THE EXHAUST DUCT AND AIR CLOSED TO CONTROL PRESSURE [FAN] PRESSURE RELATED TO THE SAME IN THE AREA TO PREVENT SMOKE SPREAD.

4. MAINTENANCE TEMP

a) DIFFERENTIAL PRESSURE SWITCH [DP] INSTALLED ACROSS THE AIR FILTERS WILL MONITOR THE FILTERS STATUS AND IN ADVANCE ALARM WILL OPERATE WHEN THE DIFFERENTIAL PRESSURE FROM ABOVE PRESET ADJUSTABLE VALUE.

b) DIFFERENTIAL PRESSURE SWITCH [DP] INSTALLED ACROSS THE SUPPLY AIR FAN [SAF], [RAF], [RAF] & [EAF] WILL MONITOR THE FAN FLOW STATUS.

GD 96 0-0-01 1