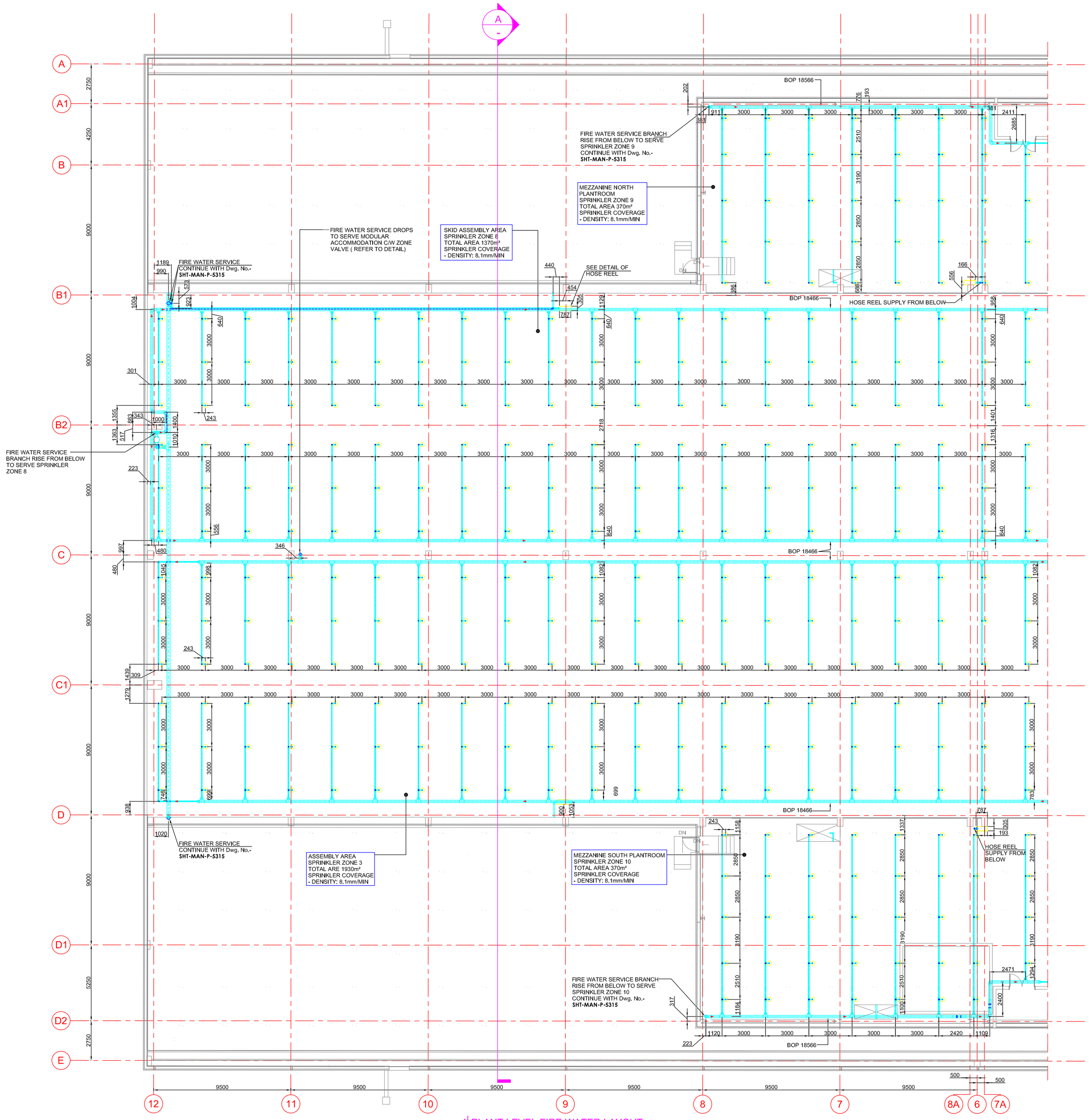

1 PLANT LEVEL FIRE WATER LAYOUT

SCALE : 1 : 100

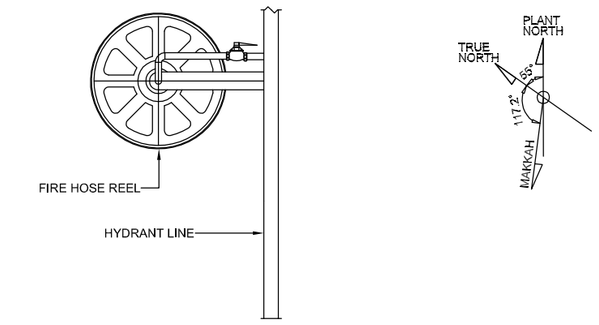

TYPICAL CONNECTION OF HYDRANT VALVE AND HOSE REEL

SCALE :- N.T.S

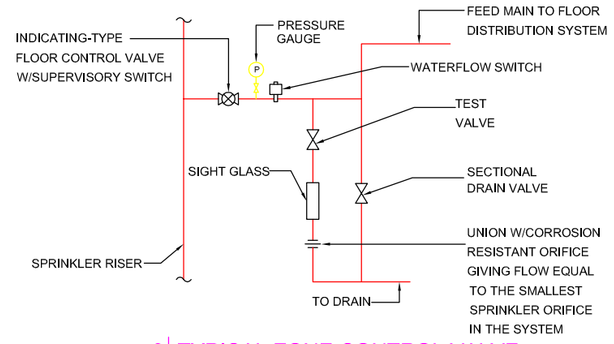

3 TYPICAL ZONE CONTROL VALVE

SCALE : 1:100

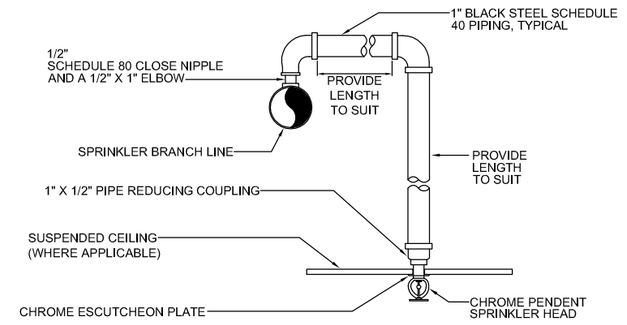

NOTES:

1. ADJUST SPRINKLER DROPS AS NECESSARY TO CLEAR OBSTRUCTIONS SUCH AS THE CEILING "T" BAR SUSPENSION SYSTEM, LIGHT FIXTURES, ETC. PROVIDE A PIPE HANGER IF THE HORIZONTAL OFFSET LENGTH EXCEEDS 24 INCHES.
2. THIS SPRINKLER HEAD DROP IS APPLICABLE ONLY WHERE IT IS NOT NECESSARY TO RETAIN AN UPRIGHT SPRINKLER FOR PROTECTION OF COMBUSTIBLE CONSTRUCTION ABOVE THE CEILING.

4 TYPICAL NEW SPRINKLER HEAD DROP

SCALE : 1:100

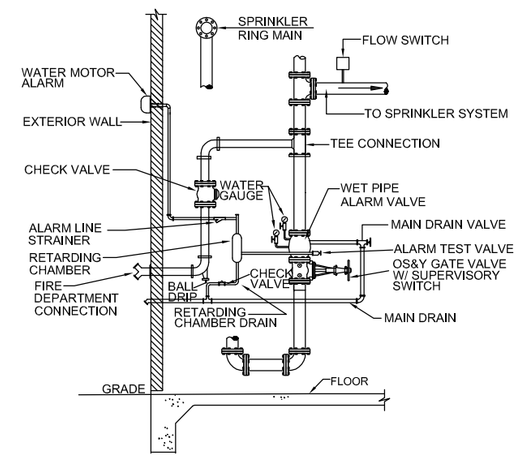

5 TYPICAL INCOMING FIRE SERVICE DETAIL

SCALE : 1:100

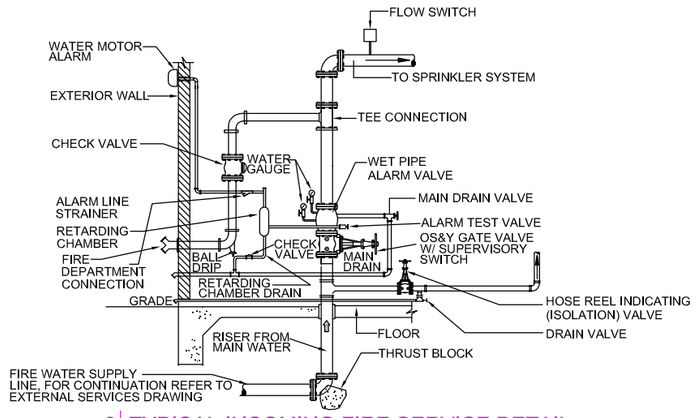

6 TYPICAL INCOMING FIRE SERVICE DETAIL

SCALE : 1:100