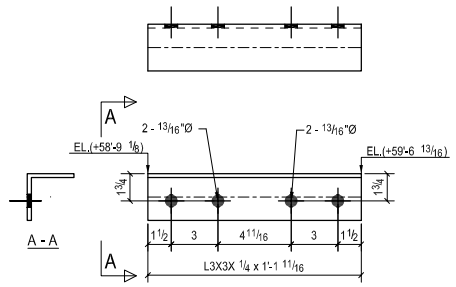


2 ~ ANGLE ~ 203M1

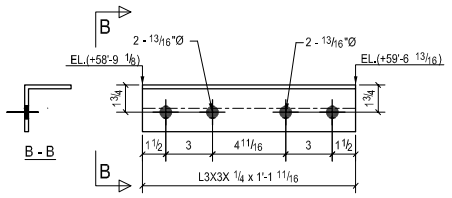


4 ~ ANGLE ~ 203M2

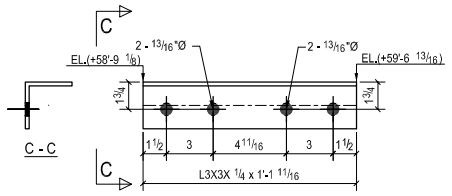


4 ~ ANGLE ~ 203M3

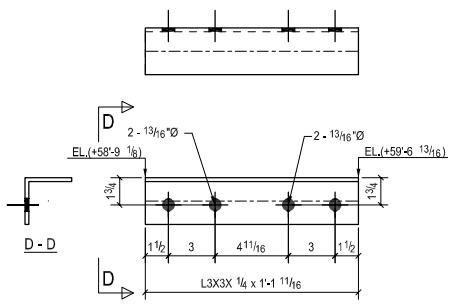


4 ~ ANGLE ~ 203M4

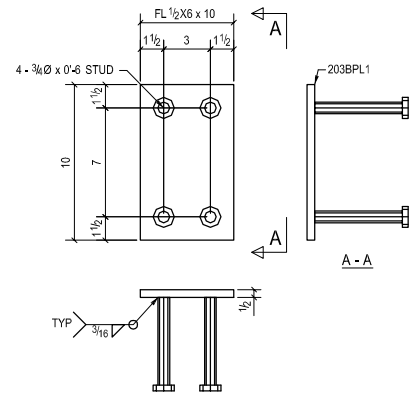


5 ~ ROOF BEARING PLATE ~ 203BPL1

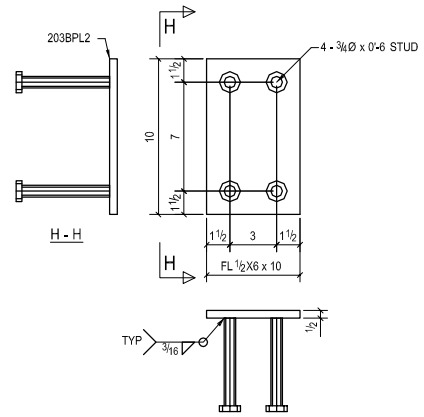


9 ~ ROOF BEARING PLATE ~ 203BPL2

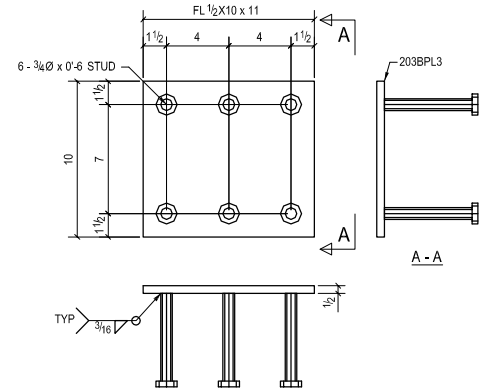


1 ~ OVER BEARING PLATE ~ 203BPL3

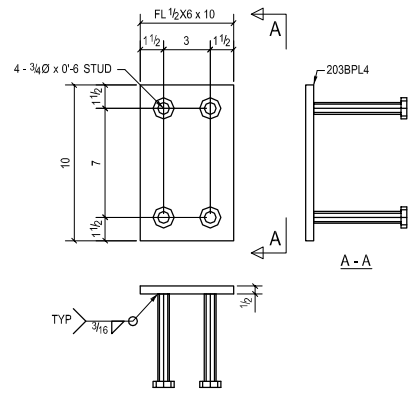


16 ~ OVER BEARING PLATE ~ 203BPL4

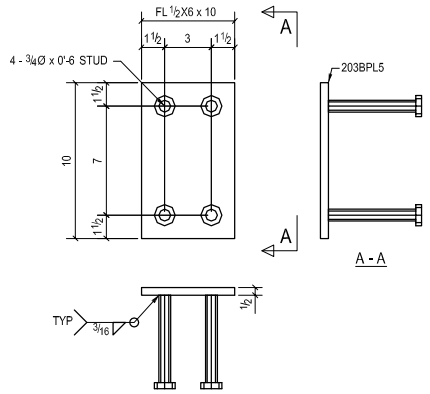


4 ~ OVER BEARING PLATE ~ 203BPL5

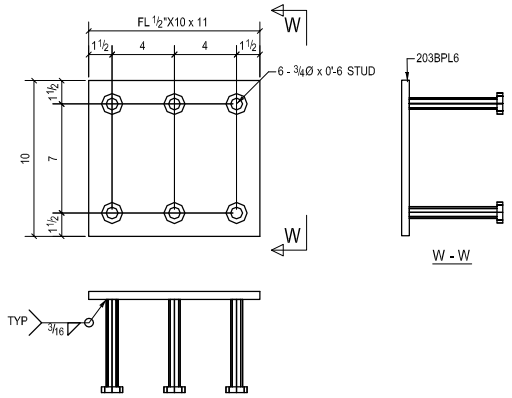


1 ~ ROOF BEARING PLATE ~ 203BPL6

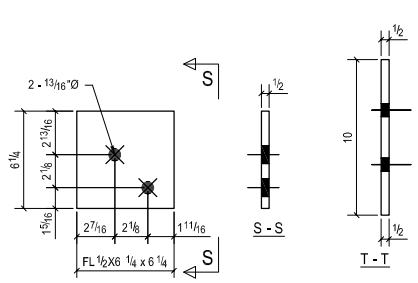


3 ~ PLATE ~ 203PL1

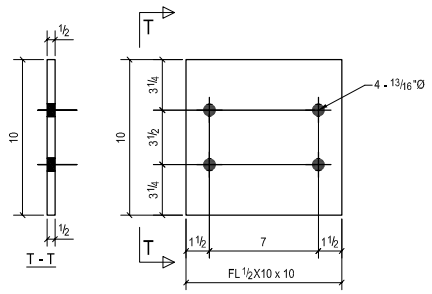


6 ~ PLATE ~ 203PL2

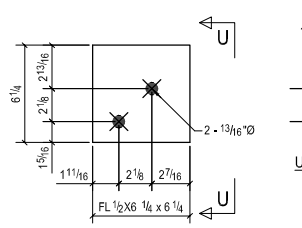


4 ~ PLATE ~ 203PL3

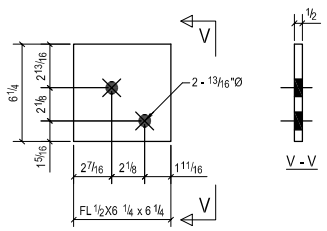


4 ~ PLATE ~ 203PL4

# BILL OF MATERIAL

| MARK | QTY | DESCRIPTION | LENGTH | WEIGHT | REMARKS |
|---|---|---|---|---|---|
| 203BPL | 5 | ROOF BEARING PLATES | | | SQ-2 |
| 203BPL | 5 | FL1/2"X6" | 0'-10" | 43 | A36 |
| | 20 | STUD 3/4" DIA | 0'-6" | 17 | |
| 203BPL | 9 | ROOF BEARING PLATES | | | SQ-2 |
| 203BPL | 9 | FL1/2"X6" | 0'-10" | 77 | A36 |
| | 36 | STUD 3/4" DIA | 0'-6" | 31 | |
| 203BPL | 1 | OVER BEARING PLATE | | | SQ-2 |
| 203BPL | 1 | FL1/2"X10" | 0'-11" | 16 | A36 |
| | 6 | STUD 3/4" DIA | 0'-6" | 5 | |
| 203BPL | 16 | OVER BEARING PLATES | | | SQ-2 |
| 203BPL | 16 | FL1/2"X6" | 0'-10" | 136 | A36 |
| | 64 | STUD 3/4" DIA | 0'-6" | 55 | |
| 203BPL | 4 | OVER BEARING PLATES | | | SQ-2 |
| 203BPL | 4 | FL1/2"X6" | 0'-10" | 34 | A36 |
| | 16 | STUD 3/4" DIA | 0'-6" | 14 | |
| 203BPL | 1 | ROOF BEARING PLATE | | | SQ-2 |
| 203BPL | 1 | FL1/2"X10" | 0'-11" | 16 | A36 |
| | 6 | STUD 3/4" DIA | 0'-6" | 5 | |
| 203M1 | 2 | ANGLES | | | SQ-2 |
| 203M1 | 2 | L3X3X1/4 | 1'-1 11/16" | 11 | A36 |
| 203M2 | 4 | ANGLES | | | SQ-2 |
| 203M2 | 4 | L3X3X1/4 | 1'-1 11/16" | 22 | A36 |
| 203M3 | 4 | ANGLES | | | SQ-2 |
| 203M3 | 4 | L3X3X1/4 | 1'-1 11/16" | 22 | A36 |
| 203M4 | 4 | ANGLES | | | SQ-2 |
| 203M4 | 4 | L3X3X1/4 | 1'-1 11/16" | 22 | A36 |
| 203PL1 | 3 | PLATES | | | SQ-2 |
| 203PL1 | 3 | FL1/2"X6 1/4" | 0'-6 1/4" | 17 | A36 |
| 203PL2 | 6 | PLATES | | | SQ-2 |
| 203PL2 | 6 | FL1/2"X10" | 0'-10" | 85 | A36 |
| 203PL3 | 4 | PLATES | | | SQ-2 |
| 203PL3 | 4 | FL1/2"X6 1/4" | 0'-6 1/4" | 22 | A36 |
| 203PL4 | 4 | PLATES | | | SQ-2 |
| 203PL4 | 4 | FL1/2"X6 1/4" | 0'-6 1/4" | 22 | A36 |
| | | TOTAL WEIGHT THIS DRAWING | | 672 | |


CONSULTANTS:

MJE & D

MJ ENGINEERING & DESIGN

3 BATTISTA CT

SAYREVILLE NJ 08872

PHONE : (201) 365-8065

EMAIL : YOUSSEFPE@GMAIL.COM


| NO. | DATE | REVISION |
|---|---|---|
| A | | |

DESIGNER: ---

DRAWN BY:

CHECKED BY:

Date:

CLIENT:

PROJECT:

122 W 146TH STREET
NEW YORK CITY, NY 10039

DRAWING TITLE:

BEARING PLATE & BRACING ANGLE

DRAWING NO.: 203

SHEET NO.: 203