SHOP MATERIAL LIST FOR 3 ASSEMBLY			
MARK	SIZE	LENGTH MM	Total Qty.
CA2 - pl15	PL6*183	266	6
pl45	PL10*125	1792	3
pl72	PLT8*100	148	12
pl294	PL10*125	1750	3
pl301	PL6*40	266	6
pl463	PL12*200	673	3
pl464	PLT8*600	1784	3

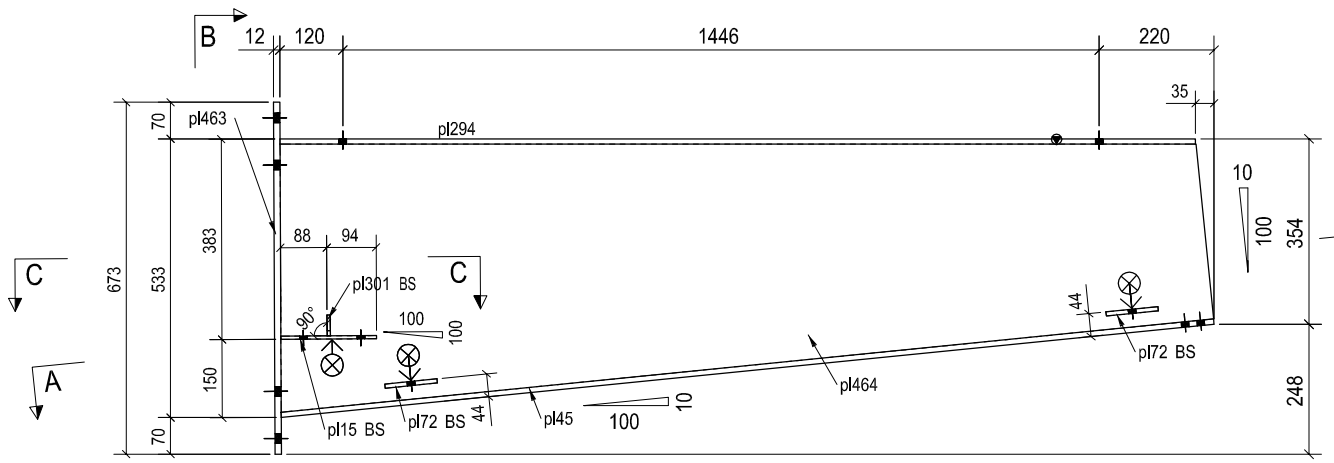

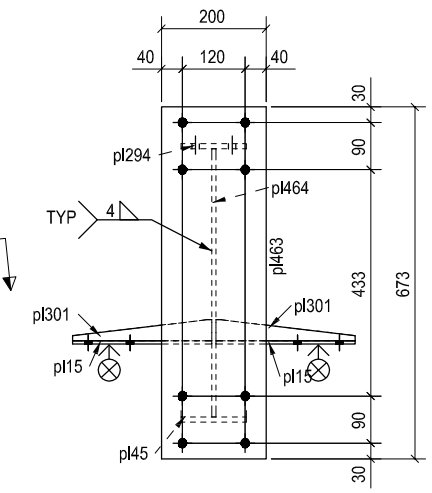

B - B

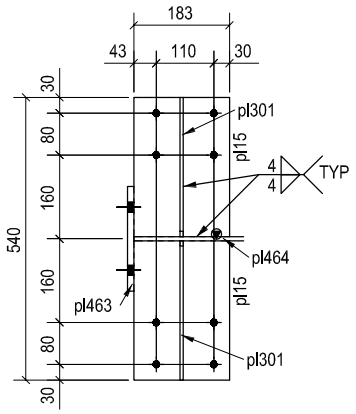

C - C

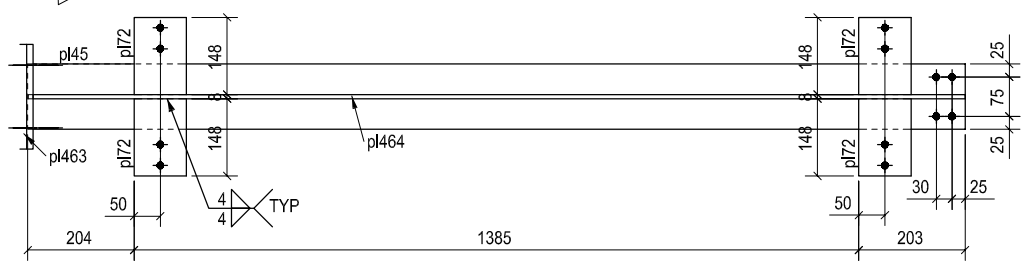

A - A

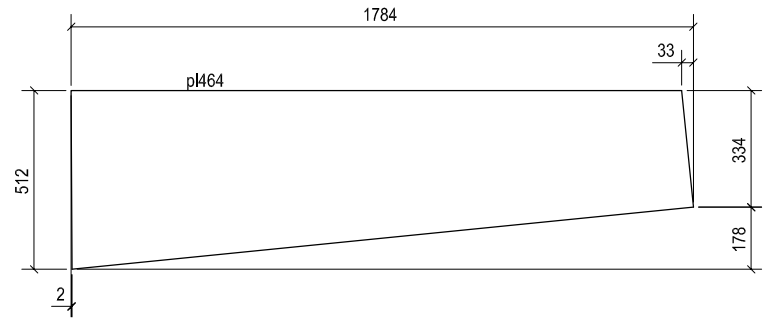

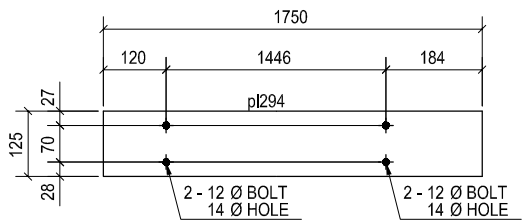

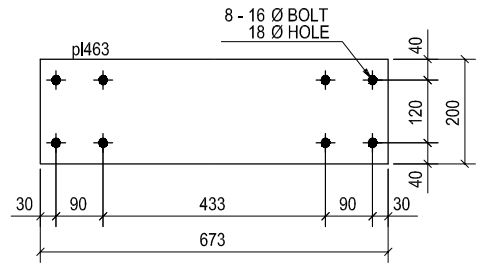

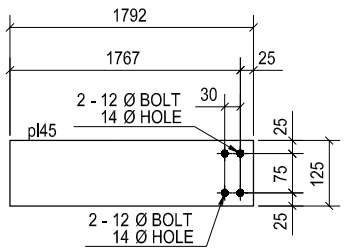

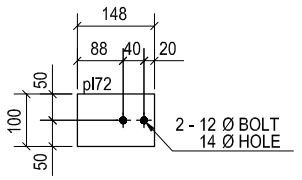

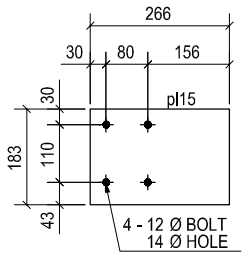

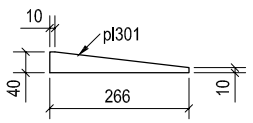

DATE :-	PROJECT : -				CLIENT : -	DRAWING					DRAWING
23-01-2013	WEAVING PLANT AT SANTEJ					CANOPY-CA2				SHREE PREFAB STEELS P LIMITED. PLOT NO.453 ,Opp. Chacharwadi Bus Stop, Nr SPI ContainerOpp. Divya Bhaskar Press, Chnagodar Bavla Road,Chacharwadi. Phone: 079-65413309 , 40075253 Fax: 079-30022795 Mobile: 09099972642	NO :-
						SCALE :- AS SHOWN	DRAWN:- N.J.	CHECKED :- K.G.	REVISION :- A		CA2
		A	FOR FABRICATION								
		REV.	DESCRIPTION	DATE							