SHOP MATERIAL LIST FOR 1 ASSEMBLY

MARK	SIZE	LENGTH MM	Total Qty.
CA1 - pl15	PL6*183	266	2
pl72	PLT8*100	148	2
pl301	PL6*40	266	2
pl448	PL10*125	1773	1
pl461	PL10*125	1792	1
pl472	PLT8*600	1808	1
pl473	PL12*200	674	1

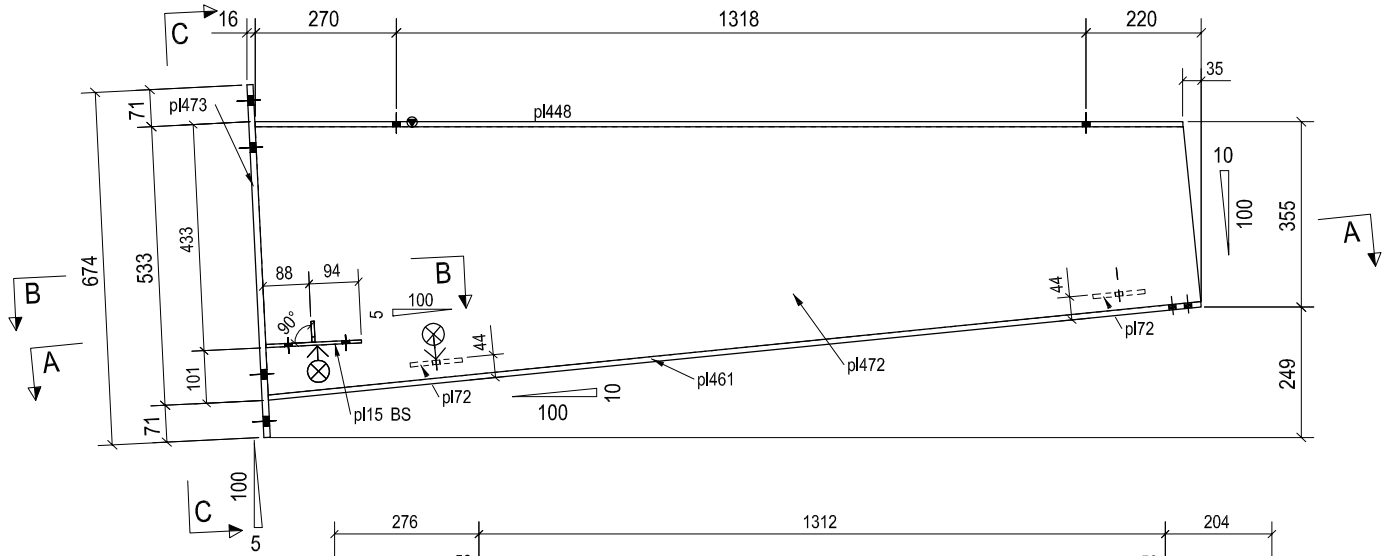

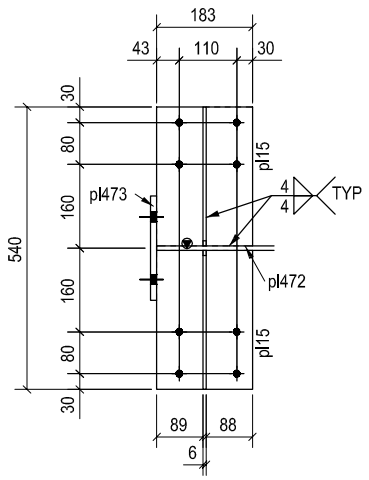

B - B

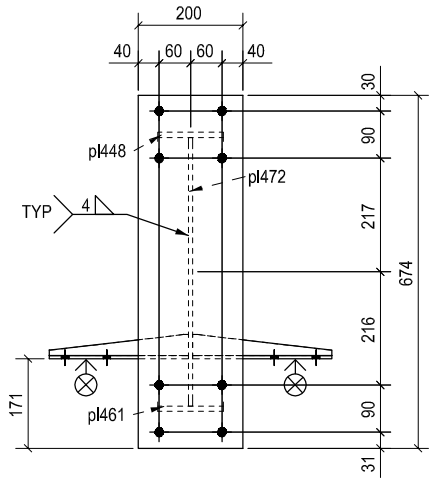

C - C

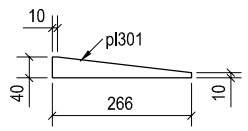

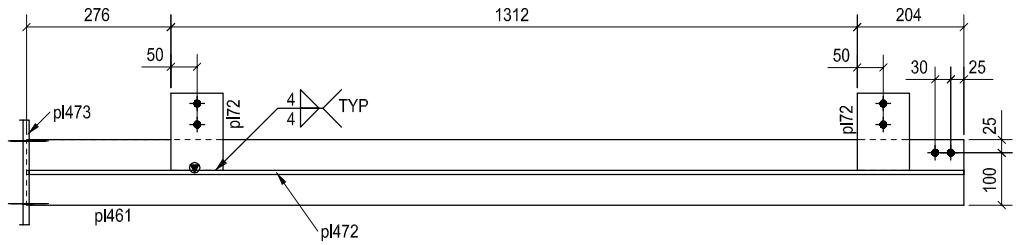

A - A

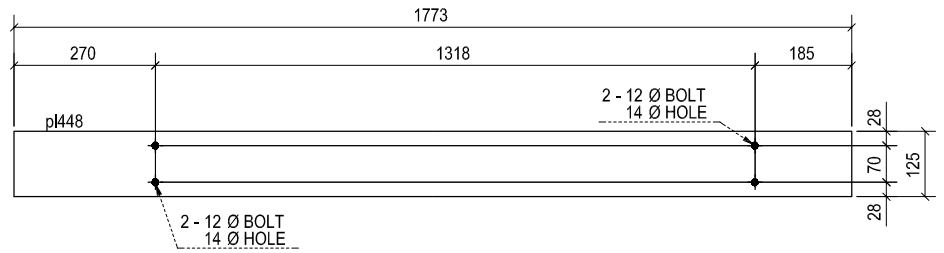

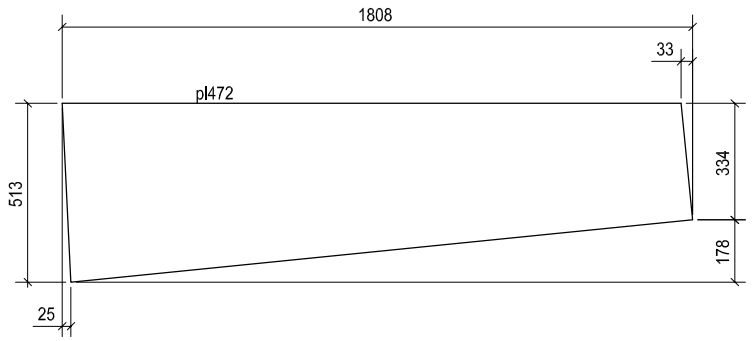

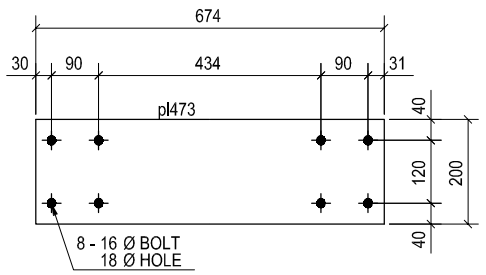

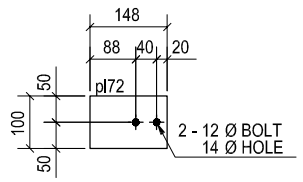

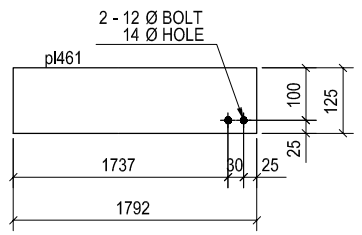

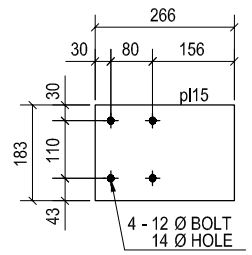

DATE :-	PROJECT : -				CLIENT : -	DRAWING					DRAWING NO :-
23-01-2013	WEAVING PLANT AT SANTEJ					CANOPY-CA1				SHREE PREFAB STEELS P LIMITED. PLOT NO.453 ,Opp. Chacharwadi Bus Stop, Nr SPI ContainerOpp. Divya Bhaskar Press, Chnagodar Bavla Road,Chacharwadi. Phone: 079-65413309 , 40075253 Fax: 079-30022795 Mobile: 09099972642	CA1
		A	FOR FABRICATION			SCALE :- AS SHOWN	DRAWN:- N.J.	CHECKED :- K.G.	REVISION :- A		
		REV.	DESCRIPTION	DATE							