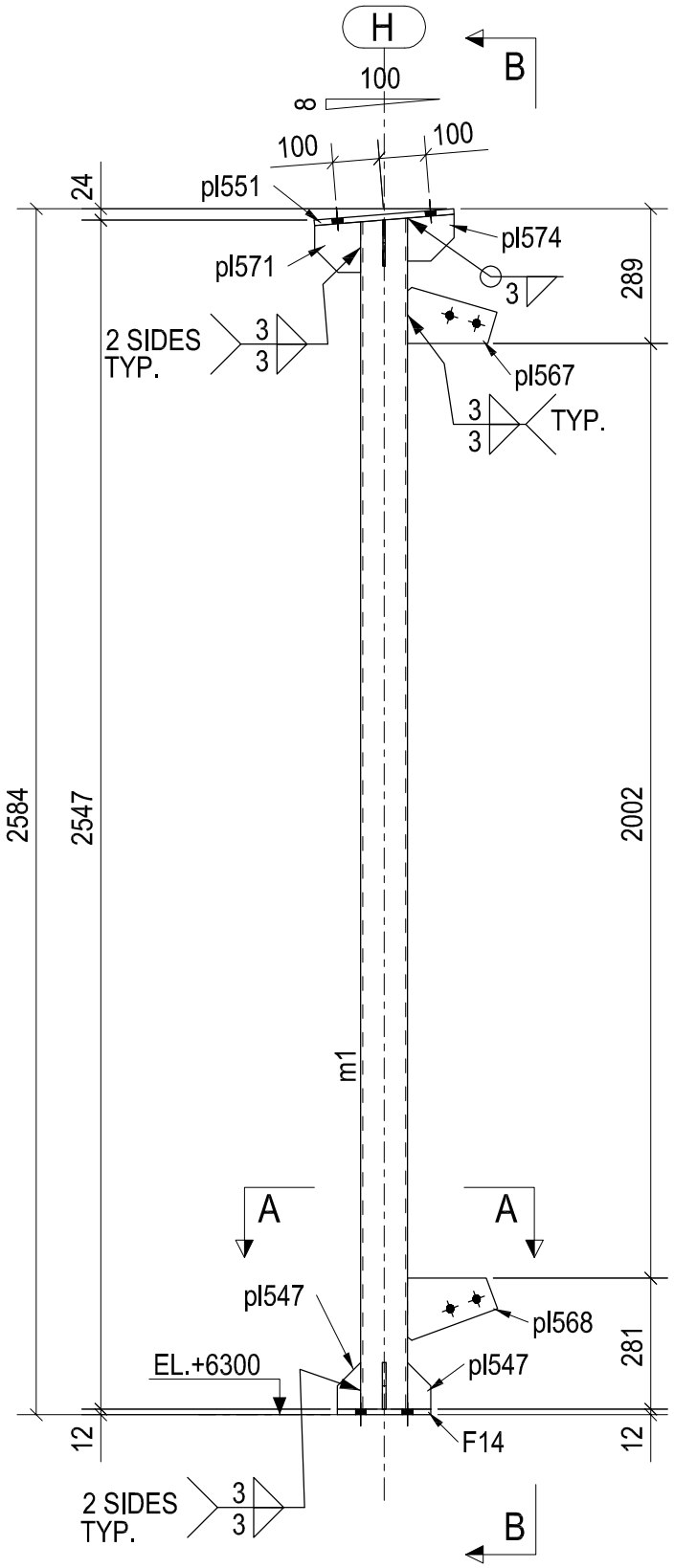

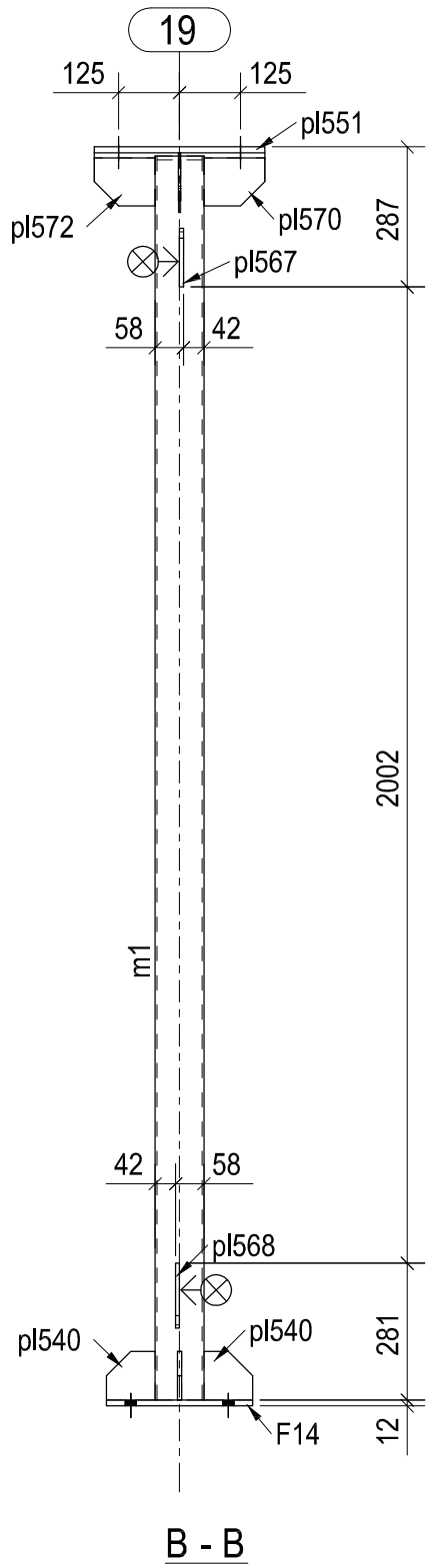

B - B

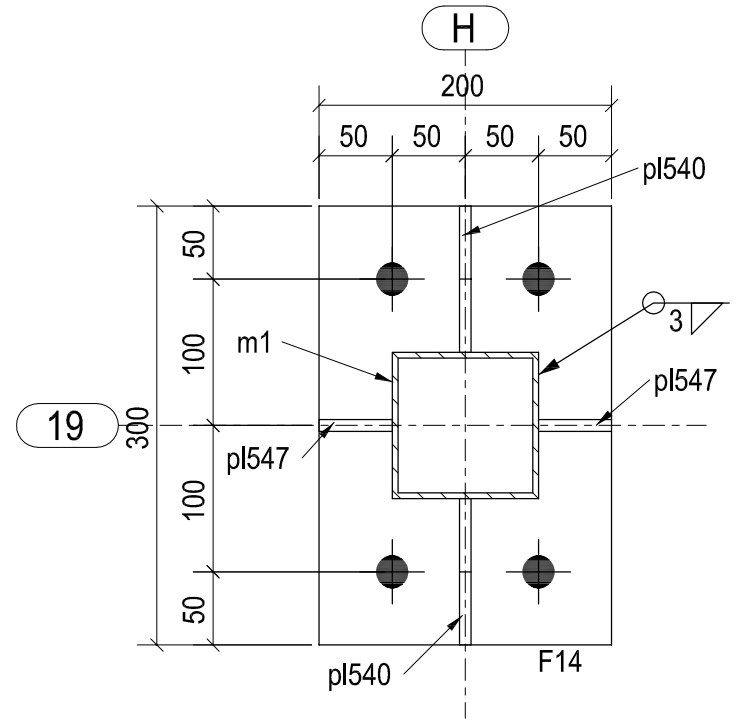

A - A

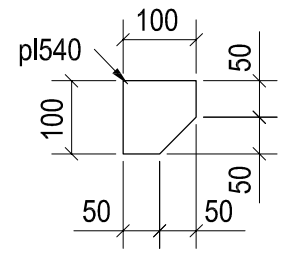

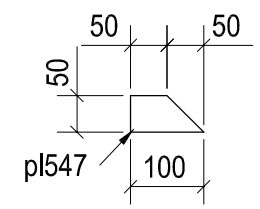

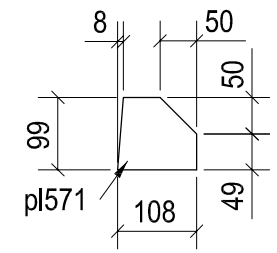

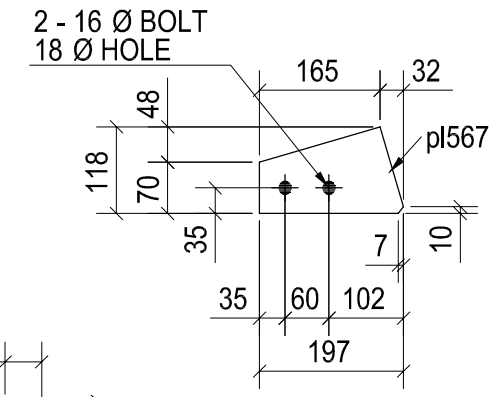

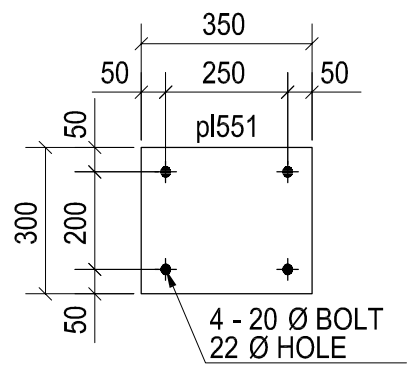

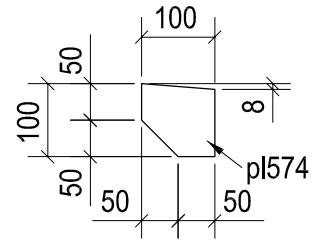

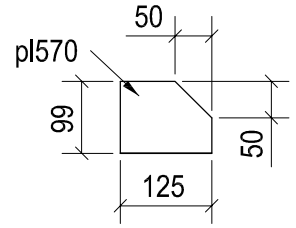

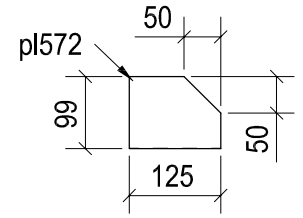

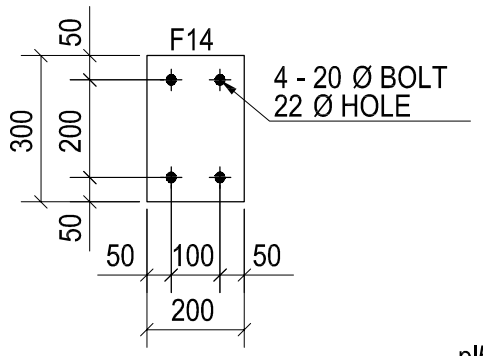

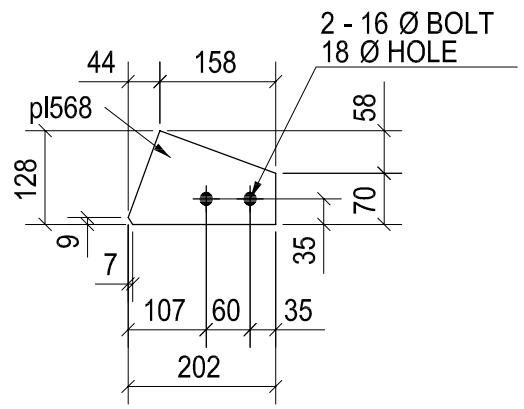

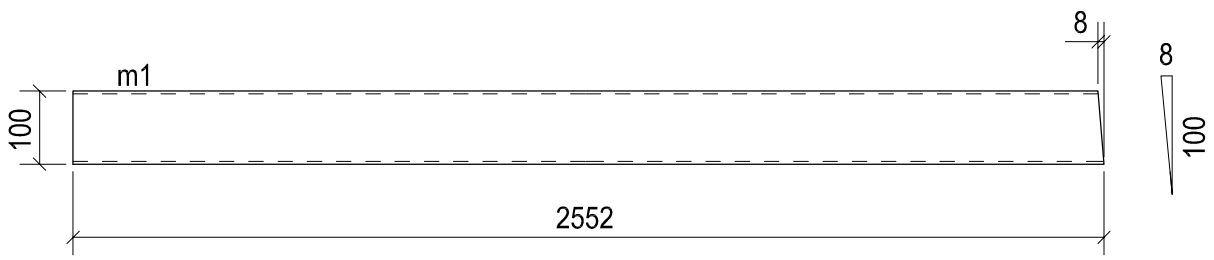

NOTES:
1).UNLESS OTHERWISE SPECIFIED ALL DIMENSIONS ARE IN MM.
2).TOLERANCE FOR ALL ATTACHED COMPONENTS & C/D SHALL BE ± 1mm.
3).TOLERANCE OVERALL LENGTH OF COLUMN & RAFTER ± 2mm.
4). ALL PURLIN CLEAT BOLTS ARE 12mmØ.
5). ALL BOLTS ARE 16mm Ø U.N.O.
6). INDICATES CONNECTING SIDE MARK
7). INDICATES DIMENSION FACE MARK
8). BS = BOTH SIDE
9). NS = NEAR SIDE
10). FS = FAR SIDE

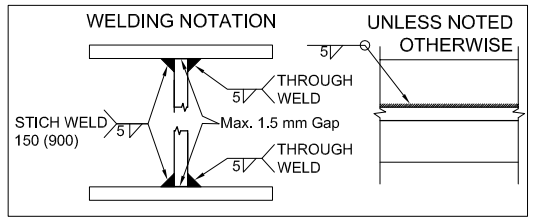

SHOP MATERIAL LIST FOR 3 ASSEMBLY

MARK	SIZE	LENGTH MM	Total Qty.
H2 - m1	SHS100*4	2552	3
F14	PLT12*200	300	3
pl540	PL8*100	100	6
pl547	PL8*50	100	6
pl551	PLT12*300	350	3
pl567	PLT8*118	197	3
pl568	PLT8*128	202	3
pl570	PL5*99	125	3
pl571	PL5*99	108	3
pl572	PL5*99	125	3
pl574	PL5*100	100	3

DATE :- 01-JAN-2013	PROJECT : - WEAVING PLANT AT SANTEJ			CLIENT : -
		A	FOR FABRICATION	
		REV.	DESCRIPTION	DATE

DRAWING: HANGER -H2

SCALE :- AS SHOWN | DRAWN:- N.J. | CHECKED :- K.G. | REVISION :- A

SHREE PREFAB STEELS P LIMITED.
PLOT NO.453 ,Opp. Chacharwadi Bus Stop, Nr SPI ContainerOpp. Divya Bhaskar Press, Chnagodar Bavla Road,Chacharwadi.
Phone: 079-65413309 , 40075253
Fax: 079-30022795
Mobile: 09099972642

DRAWING NO :- H2