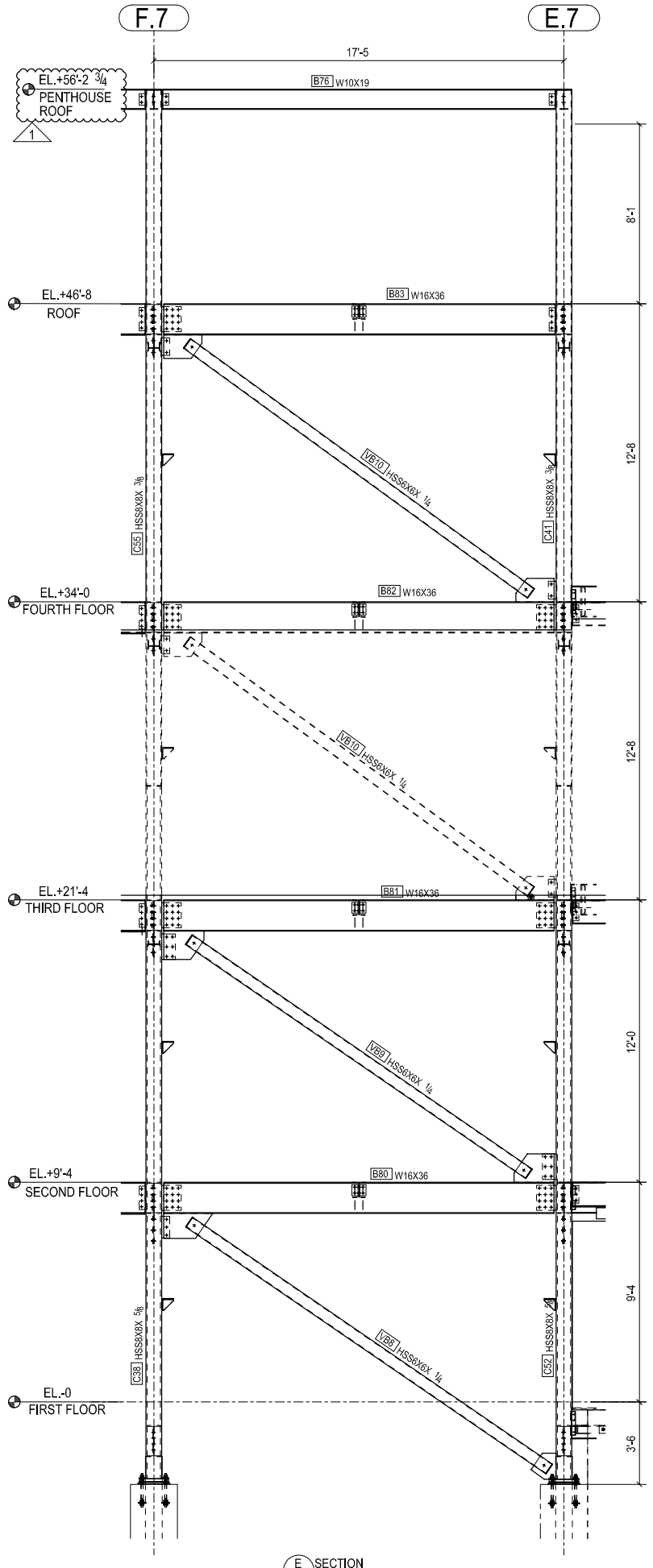

E SECTION
E2 SCALE 1:40

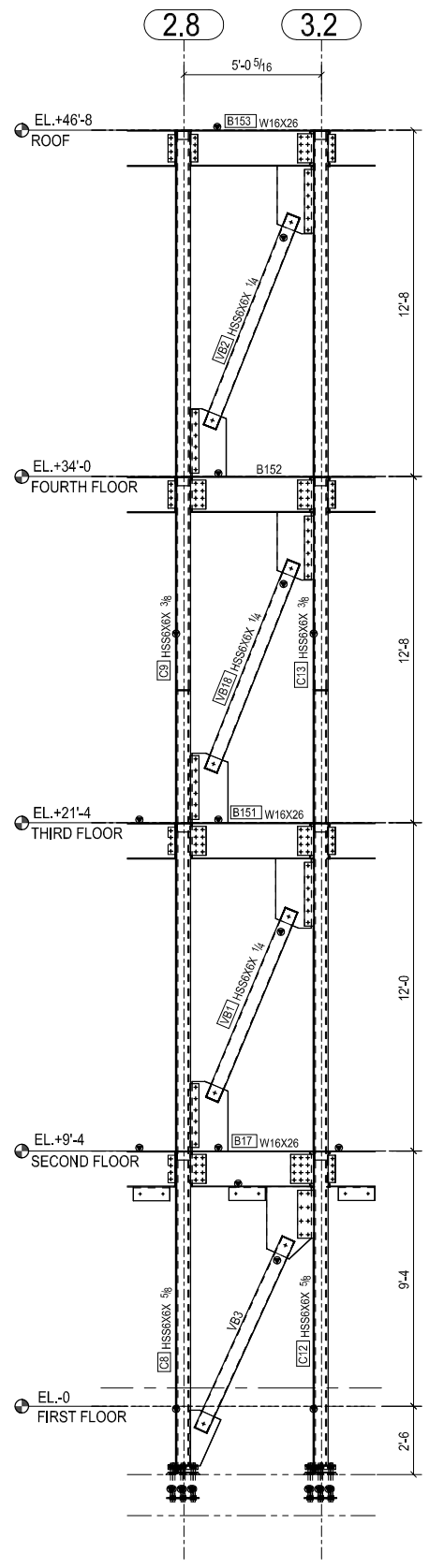

G SECTION
E3 SCALE 1:40

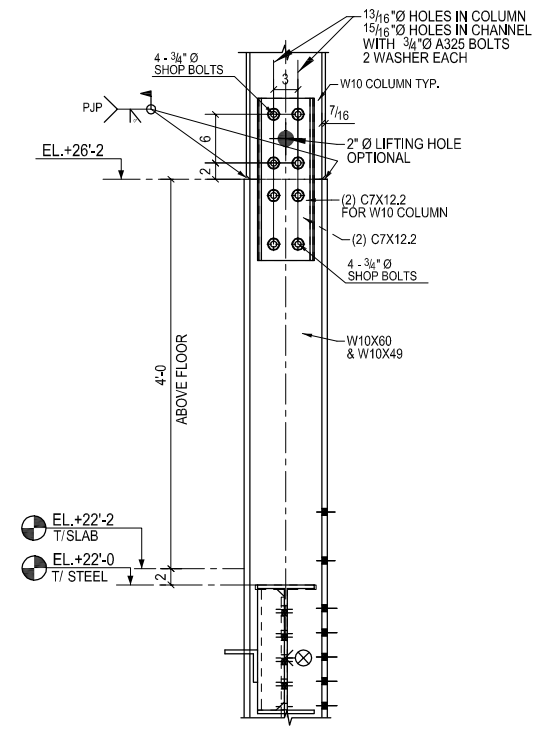

DETAIL A
E8

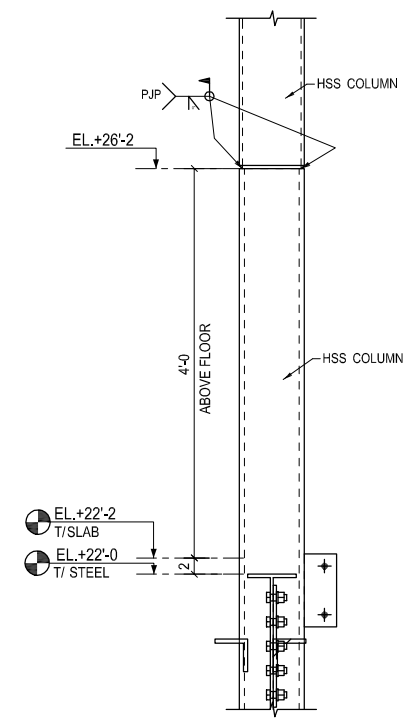

DETAIL B
E8

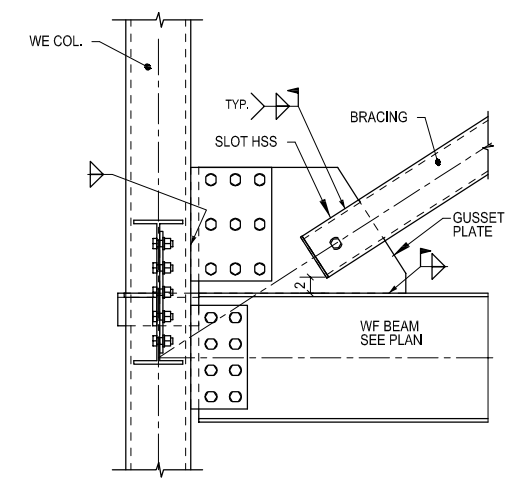

DETAIL C
E8

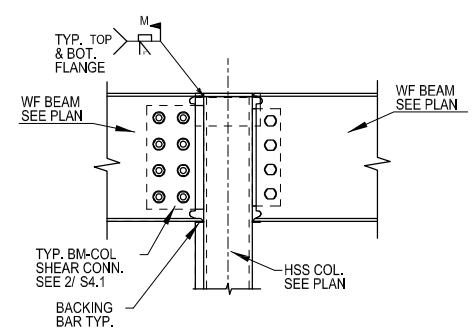

DETAIL D
E8

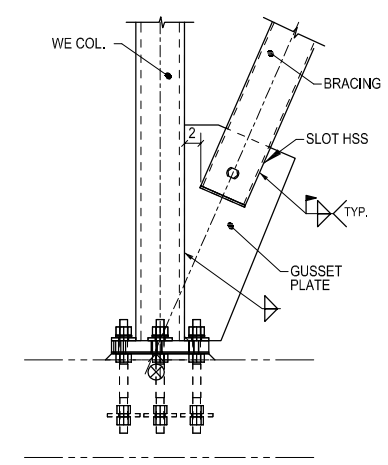

DETAIL E
E8

REV.	DESCRIPTION	DATE	DWN	CHK
0	FOR FABRICATION			

GENERAL NOTES

MATERIAL: --

HOLES: 3/4 DIA. U/N | CONN'S.: ASTM A325 | ELECTRODES : E70XX U/N

SURFACE PREP. AND PAINT: SSPC-SP6 ONE COAT OF SHOP PRIMER U.N.O. | REF. DRG.

DESCRIPTION: SECTION & DETAILS

PROJECT NAME: 328 West Wisconsin
LOCATION: CHICAGO, ILLINOIS

DRAWN BY

DRAWING FILE MODIF'r:	DATE		
DRAWN BY	DATE		
CHED. BY	DATE		
JOB No.	DRG. No. E9	REV. 0	