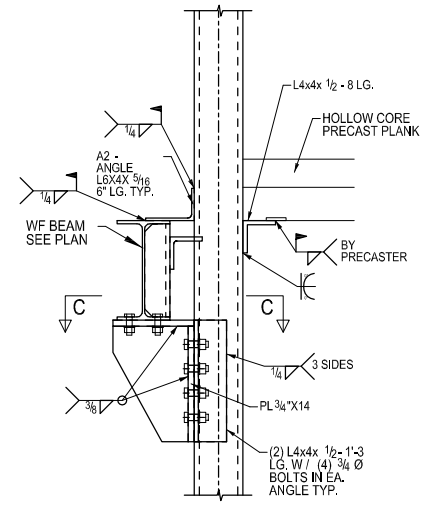

H SECTION
E4 SCALE 1:12

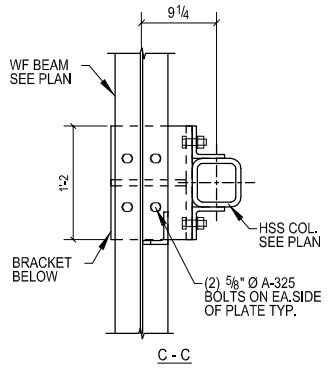

C - C

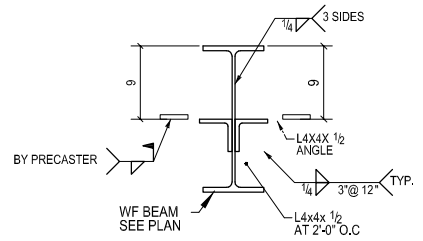

J SECTION
E2 SCALE 1:12

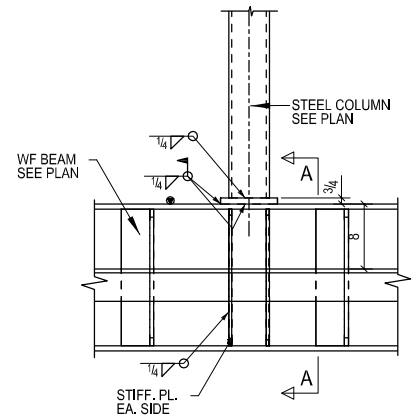

K SECTION
E5 SCALE 1:12

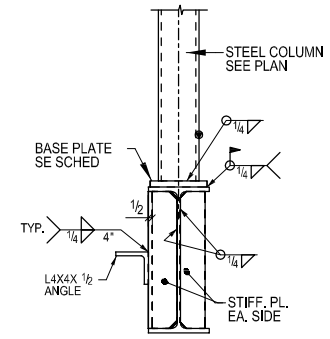

A - A

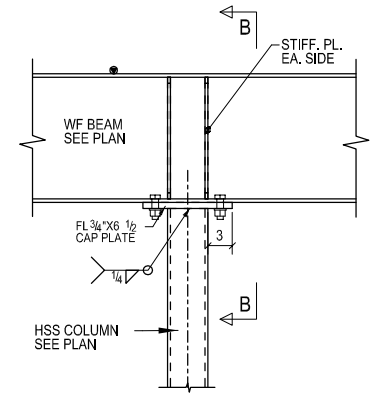

L SECTION
E3 SCALE 1:12

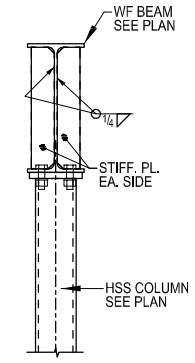

B - B

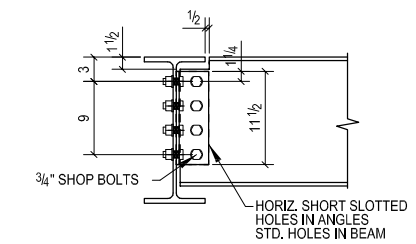

D - D

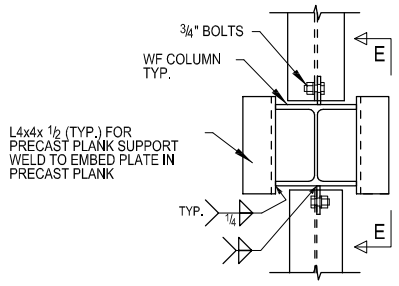

DETAIL 4
E2

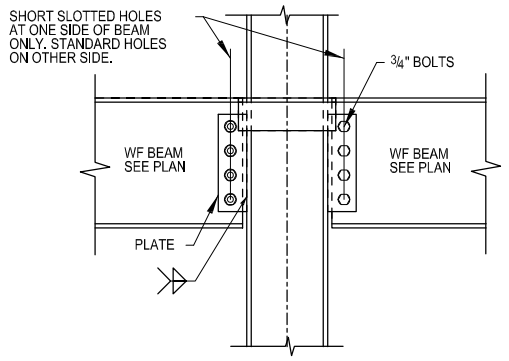

E - E

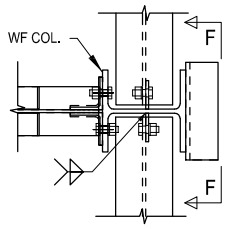

DETAIL 5
E2

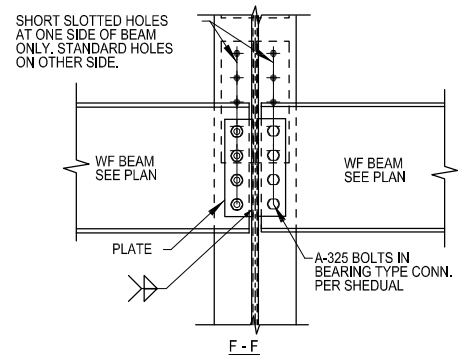

F - F

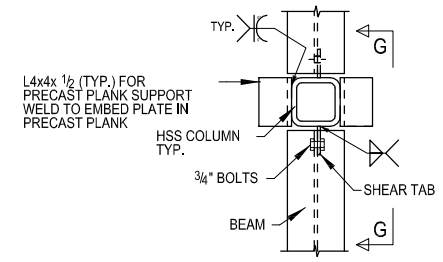

DETAIL 6
E2

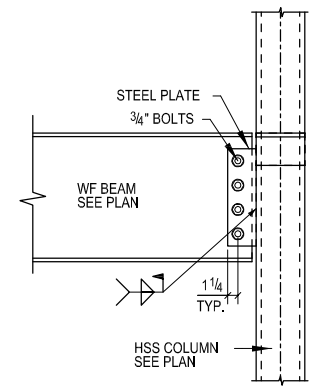

G - G

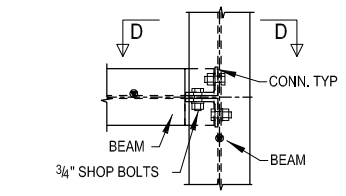

DETAIL 7
E3

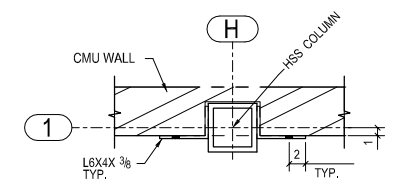

C - C

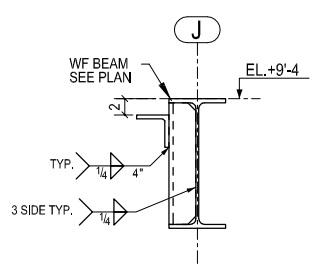

M SECTION
E3 SCALE 1:12

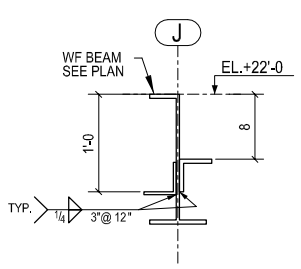

N SECTION
E4 SCALE 1:12

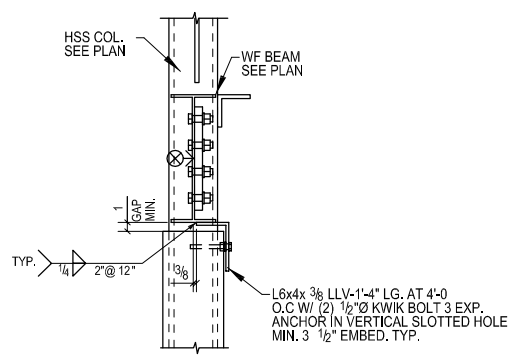

P SECTION
E3 SCALE 1:12

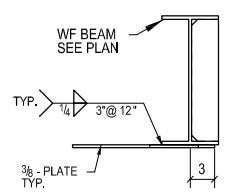

Q SECTION
E3 SCALE 1:12

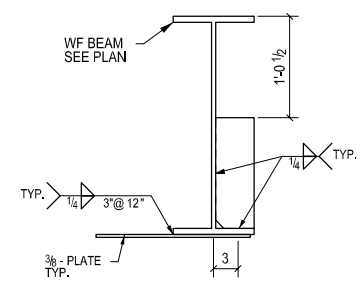

R SECTION
E3 SCALE 1:12

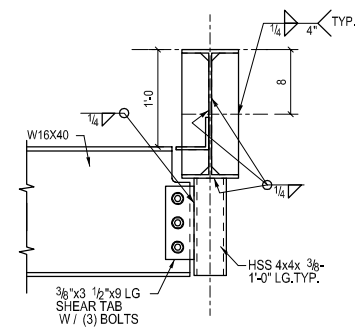

X SECTION
E3 SCALE 1:12

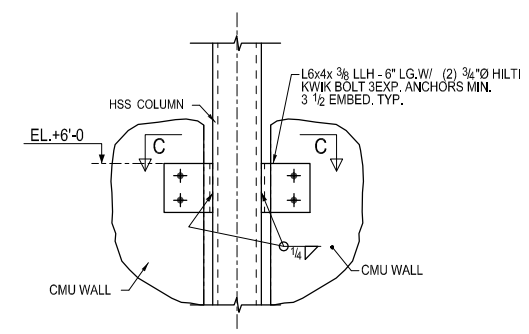

W SECTION
E3 SCALE 1:12

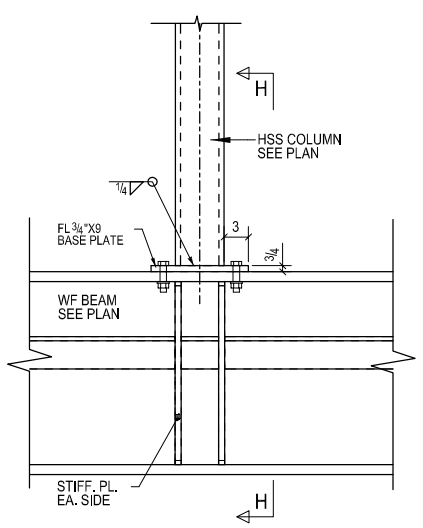

S SECTION
E3 SCALE 1:12

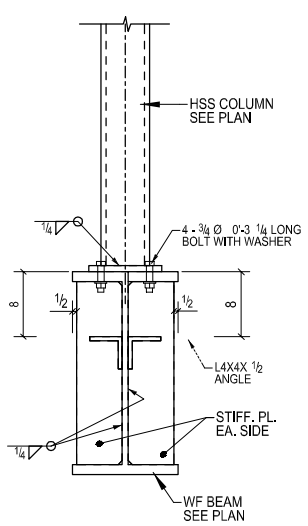

H - H

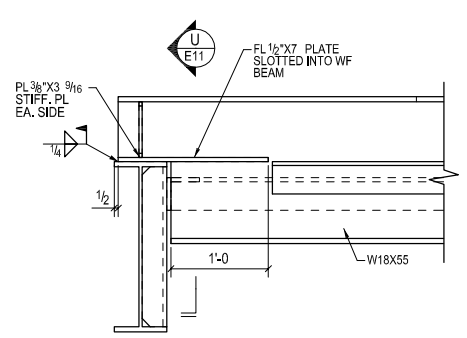

T SECTION
E6 SCALE 1:12

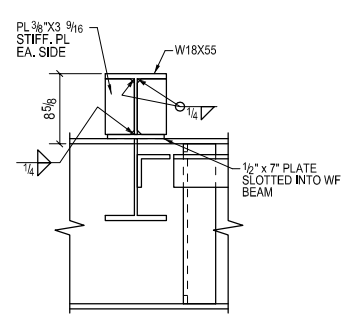

U SECTION
SCALE 1:12

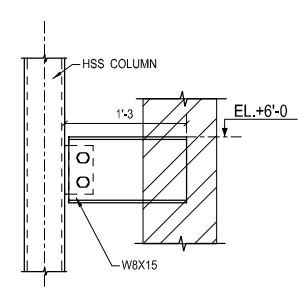

V SECTION
E3 SCALE 1:12

REV.	DESCRIPTION	DATE	DWN	CHK
0	FOR FABRICATION			

GENERAL NOTES

MATERIAL: --

HOLES: 3/4 DIA. U/N | CONN'S: ASTM A325 | ELECTRODES: E70XX U/N

SURFACE PREP. AND PAINT: SSPC-SP6 ONE COAT OF SHOP PRIMER U.N.O. | REF. DRG.

DESCRIPTION: SECTION & DETAILS

PROJECT NAME: 328 West Wisconsin
LOCATION: CHICAGO, ILLINOIS

DRAWN BY

DRAWING FILE MODIFY:	DATE
DRAWN BY	DATE
CHKD. BY	DATE
JOB No.	DRG. No. E11 / REV. 0