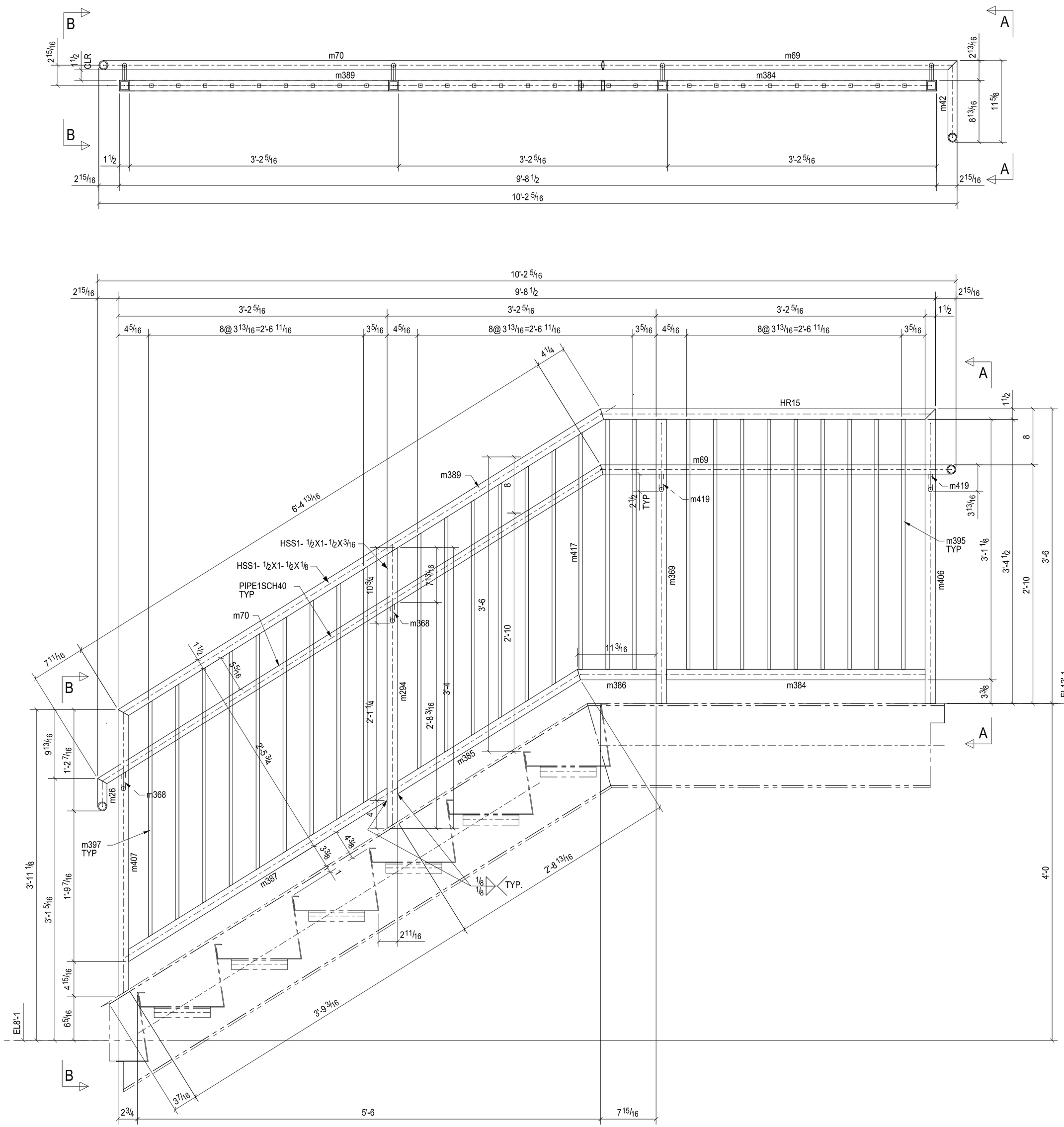

BILL OF MATERIAL

SHIP	MARK	NO PCS	DESCRIPTION	LENGTH	PIECE MARK	GRADE	REMARKS
1	HR15	1	HSS1-1/2X1-1/2X1/8	3'-11 3/4"		A500-GR.B	
		1	PIPE1SCH40	0'-4 5/8"	m26	A53	
		1	PIPE1SCH40	0'-11 5/8"	m42	A53	
		1	PIPE1SCH40	4'-2 11/16"	m69	A53	
		1	PIPE1SCH40	7'-0 7/16"	m70	A53	
		1	HSS1-1/2X1-1/2X3/16	3'-4"	m294	A500-GR.B	
		2	D5/8"	0'-3 11/16"	m368	A36	
		1	HSS1-1/2X1-1/2X3/16	3'-4 1/2"	m369	A500-GR.B	
		1	HSS1-1/2X1-1/2X1/8	3'-0 13/16"	m384	A500-GR.B	
		1	HSS1-1/2X1-1/2X1/8	2'-7 1/8"	m385	A500-GR.B	
		1	HSS1-1/2X1-1/2X1/8	0'-11 3/16"	m386	A500-GR.B	
		1	HSS1-1/2X1-1/2X1/8	3'-8 5/16"	m387	A500-GR.B	
		1	HSS1-1/2X1-1/2X1/8	6'-9"	m389	A500-GR.B	
		11	FL1/2"X1/2"	2'-11 5/8"	m395	A36	
		15	FL1/2"X1/2"	2'-9 5/8"	m397	A36	
		1	HSS1-1/2X1-1/2X3/16	3'-6"	m406	A500-GR.B	
		1	HSS1-1/2X1-1/2X3/16	3'-4 13/16"	m407	A500-GR.B	
		1	FL1/2"X1/2"	2'-9 3/4"	m417	A36	
		2	D5/8"	0'-3 1/2"	m419	A36	

REF.DRG. - S-1.6,S-1.7,

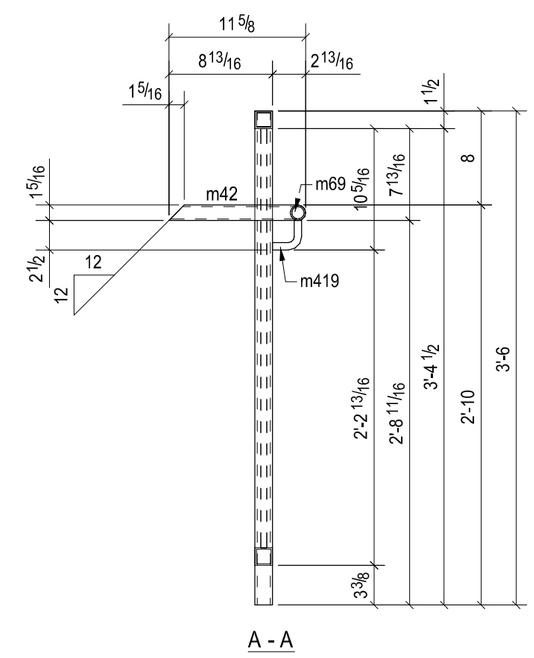

A - A

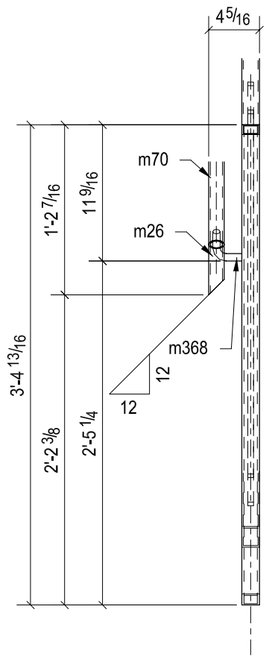

B - B

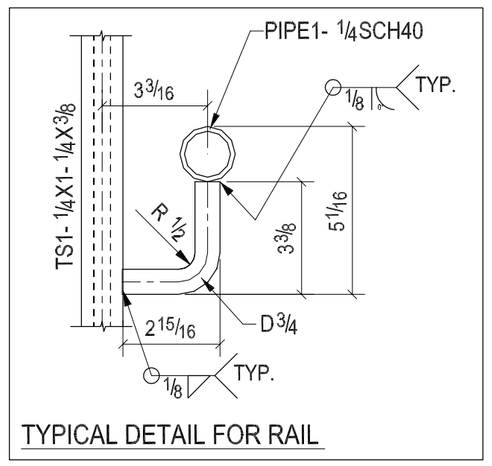

TYPICAL DETAIL FOR RAIL

SHOP NOTE. -
1. ALL WELDS SHOULD GROUND SMOOTH.
2. EASE ALL SHARP EDGES.

ONE - RAIL - HR15

REV.	DESCRIPTION	DATE	DWN	CHK
0				

GENERAL NOTES

MATERIAL:

HOLES: - DIA. U/N CONN'S.: ASTM A325 ELECTRODES : E70XX

SURFACE PREP. AND PAINT: SSPC-SP3 ONE COAT OF SHOP PRIMER U.N.O. REF. DRG.

DESCRIPTION: HANDRAIL

PROJECT NAME 210 N GREEN ST.
LOCATION 210 N GREEN ST. CHICAGO, IL

DRAWN BY

DRAWING FILE MODEL:	DATE	
DRAWN BY	DATE	
CHED. BY	DATE	
JOB No.	DRG. No. HR15	REV. 0